Kubota

Kubota HP: https://www.kubota.com/network/index.html

English (Australia)
Code No. RD858-8125-2

KX080-5

OPERATOR'S MANUAL

KUBOTA EXCAVATOR

MODEL **KX080-5**

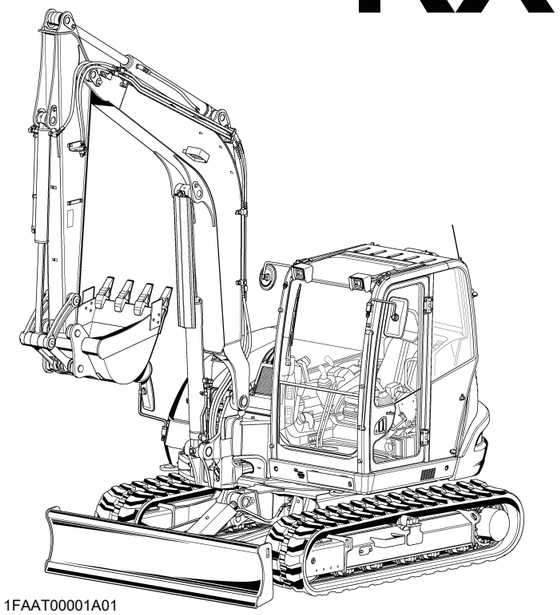

1FAAT00001A01

READ AND SAVE THIS MANUAL

PRINTED IN JAPAN

© 2026 Kubota Corporation

Kubota

LIST OF ABBREVIATION

Abbreviations	Description
AFS	Air Flow Sensor
AI	Auto Idle
API	American Petroleum Institute
ASTM	American Society for Testing and Materials, USA
CECE	Committee for European Construction Equipment
CRS	Common Rail System
DIN	Deutsches Institut für Normung, GERMANY (German Institute for Standardization)
DOC	Diesel Oxidation Catalyst
DPF	Diesel Particulate Filter
EGR	Exhaust Gas Re-circulation
EN	European Standard
FRONT	"Front" means the direction towards the boom and dozer
Hi	High speed
ISO	International Organization for Standardization
JIS	Japanese Industry Standard
L	Volume (Liter)
L/min	Liter per minute
Lo	Low speed
MAF	Mass Air Flow
MIL	Military Standard
OPG	Operator Protective Guards
OSHA	Occupational Safety and Health Administration
P/L	Pressure Limiter
PCV	Positive Crankcase Ventilation
ROPS	Roll-Over Protective Structure
rpm	Revolutions Per Minute
SAE	Society of Automotive Engineers, USA
TPSS	Two Pattern Selection System

UNIVERSAL SYMBOLS

The instruments and operation elements have been marked with a series of symbols in order to simplify the operation of the excavator. These symbols are listed below with their respective descriptions.


Safety alert symbol


Warning lamp - *"Fuel level too low"*



System lamp


Warning lamp - *"Engine oil pressure"*


Warning lamp - *"Battery charge"*


Coolant temperature


Hydraulic oil temperature



Auto Idle (AI)


Indicator lamp - *"Glow"*


Working light


Horn


Wiper


Washer and wiper



Diesel


Hydraulic fluid


Gear oil


Fast


Slow


Machine - overhead movement toward the front


Machine - overhead movement toward the rear


Swivel - left


Swivel - right


Boom - up


Boom - down


Arm - up


Arm - crowd


Bucket - crowd


Bucket - dump


Boom - swing (left)


Boom - swing (right)


Dozer - raise


Dozer - lower


Dozer float


Operation direction of control lever


Operation direction of control lever


Read operator's manual


Lock


Unlock



Engine stop



Engine auto-stop

DPF standby / regeneration



Engine rev up



Inhibit DPF regeneration



Service indicator



Menu switch



Return switch



Travel alarm cancel



Camera



Auxiliary port



Auxiliary port - one-way hold



Acknowledge



Cancel



Air conditioner

FOREWORD

Thank you for the purchase of a Kubota product.
Before using this product, read this manual carefully and use the product correctly. After reading, keep the manual in a safe and easy-to-access place for future reference. Note that product specifications are subject to change without prior notice. The product delivered to you may differ slightly from the product described in the manual.

SAFETY FIRST

This symbol, the industry's "Safety Alert Symbol", is used throughout this manual and on labels on the machine itself to warn of the possibility of personal injury. Read these instructions carefully. It is essential that you read the instructions and safety regulations before you attempt to assemble or use this unit.

DANGER:	Indicates an imminently hazardous situation which, if not avoided, will result in death or serious injury.
WARNING:	Indicates a potentially hazardous situation which, if not avoided, could result in death or serious injury.
CAUTION:	Indicates a potentially hazardous situation which, if not avoided, could result in minor or moderate injury.
IMPORTANT:	Indicates that equipment or property damage could result if instructions are not followed.
NOTE:	Gives helpful information.

CONTENTS

SAFE OPERATION 7

DEALER SERVICE 25

WARRANTY POLICY 25
SCRAPPING THE PRODUCT AND ITS PROCEDURE 26

TECHNICAL DATA 27

EXCAVATOR PARTS 28

INSTRUMENT PANEL AND CONTROLS 29

INSTRUMENT PANEL AND SWITCHES 29
HANDLING THE INSTRUMENT PANEL AND SWITCHES 32
1. Starter switch 32
2. Display for normal operation 32
2.1 Fuel gauge 32
2.2 Fuel level audible indication function (when refueling) 33
2.3 Coolant temperature gauge 33
2.4 Overheat warning 34
2.5 Hydraulic oil temperature gauge 34
2.6 Hydraulic oil overheat warning 34
2.7 Temperature drop indication of hydraulic oil 35
2.8 Hour meter 35
2.9 Engine tachometer 35
2.10 Glow indication 35
2.11 Periodic Check 35
2.11.1 Service hour meter 37
2.12 Log record 38
2.13 AUX settings 38
2.14 User settings 38
2.14.1 Setting the language 38
2.14.2 Setting the clock 39
2.14.3 Reordering year/month/day and selecting AM/PM or 24-hour 40
2.14.4 Setting the display brightness 41
2.14.5 Setting the engine auto-stop function 41
2.14.6 Setting the work light turn-off delay function 42
2.14.7 Registering new user passwords 42
2.14.8 Changing user passwords 44
2.14.9 Deleting user passwords 44
2.14.10 Changing the machine password 45
3. Warning lamp 46
4. Display for warnings 46
4.1 Remaining fuel warning 46
4.2 Battery charge warning 46
4.3 Low engine oil pressure warning 46
4.4 Various error warnings 47
4.5 Checking error warnings 47
HORN SWITCH 47
OPERATING THE WORKING LIGHT SWITCH 47
1. Night operation 48
AUX PORT ENABLE SWITCH 48
AUTO IDLE CONTROL SWITCH 48
THROTTLE POTENTIOMETER 49
TRAVEL SPEED SWITCH 49
INHIBIT DIESEL PARTICULATE FILTER (DPF) REGENERATION SWITCH 50

BEACON LIGHT SWITCH 50
TRAVEL ALARM CANCEL SWITCH 50
ELECTRICAL OUTLET AND USB OUTLET 51
REAR VIEW CAMERA 51
1. Error messages during camera operation 52
CONTROL PEDALS AND LEVERS 53
HANDLING THE PILOT CONTROL LOCK LEVER 54
CAB OPERATION 55
OPERATING THE WIPER AND WASHER 55
INTERIOR LAMP 55
OPENING AND CLOSING THE CAB DOOR 55
OPENING AND CLOSING THE FRONT WINDOW DOOR OF THE CAB 56
OPENING AND CLOSING THE SIDE WINDOW OF THE CAB 56
REMOVING THE FRONT WINDOW BASE 57
EMERGENCY HAMMER 57
AIR CONDITIONER 57
1. Air flow 58
2. Air control vent 58
2.1 Front air outlet 58
3. Control panel 58
4. Operation 59
OPERATING THE ENGINE 60
STARTING THE ENGINE 60
STARTING THE ENGINE UNDER COLD CONDITIONS 62
STARTING WITH AN AUXILIARY BATTERY 63
CHECK POINTS AFTER STARTING THE ENGINE 63
STOPPING THE ENGINE 64
1. Engine stop button 64
2. Overheating countermeasures 64
DPF REGENERATION 64
OPERATING THE EXCAVATOR 66
OPERATION OF A NEW MACHINE 66
PREPARATIONS BEFORE STARTING THE MACHINE 66
1. Adjusting the operator's seat 66
2. Using the seat belt 67
STARTING THE MACHINE 67
1. Pilot control lock lever 67
DRIVING 68
1. Drive levers (right, left) 69
TURNS 69
1. Pivot turn 69
2. Spin turn 70
UP AND DOWNHILL DRIVING 71
PARKING ON A SLOPE 71
OPERATING THE DOZER 71
TWO PATTERN SELECTION SYSTEM (TPSS) 71
1. Pattern change 72
OPERATING THE BOOM 72
OPERATION OF THE ARM 72
OPERATION OF THE BUCKET 73
SWIVEL AND BOOM SWING OPERATION 73
1. Swivel operation 73
2. Boom swing operation 74
AUXILIARY PORT OPERATION 74
1. Selecting operation modes 74
2. Operating the AUX port 75

2.1 One-way hold 77
3. Maximum flow volume 77
3.1 Setting the maximum flow volume 77
RELEASING PRESSURE TRAPPED IN THE HYDRAULIC SYSTEM 80
1. Releasing pressure trapped in the AUX port 80
ONE-WAY OR TWO-WAY CIRCUIT SELECTION VALVE OPERATION 81
OPERATING THE BOOM LOWERING VALVE 81
AUTO IDLE (AI) OPERATION 82
IMPORTANT INFORMATION ON MACHINE OPERATION 83
TRANSPORTING THE MACHINE 84
TRANSPORTING ON A TRUCK 84
TOWING THE MACHINE 85
LIFTING THE EXCAVATOR 87
BASIC POINTS WHEN LIFTING WITH CABLES OR STRAPS 87
SAFETY ASPECTS WHEN LIFTING WITH CABLES OR STRAPS 87
LIFTING THE MACHINE 87
MAINTENANCE 90
PRECAUTIONS WHEN WASHING THE MACHINE 90
MAINTENANCE INTERVALS 91
1. Air conditioner 94
OPENING AND CLOSING THE COVERS 95
1. Opening and closing the fuel tank cover 95
2. Opening and closing the engine hood 95
3. Opening and closing the side cover 95
4. Storing tools 96
5. Cup holder 96
6. Storing the grease gun 96
7. Where to keep the operator's manual 96
8. Utility box 97
9. Where to store the fire extinguisher 97
DAILY CHECKS 97
1. Walk-around inspection 97
2. Checking the coolant level 97
3. Checking the fuel level 98
4. Checking the engine oil level 98
5. Checking the hydraulic oil level 99
6. Checking the water separator 100
7. Checking the radiator, oil cooler, and fuel cooler 100
8. Checking the ROPS 101
9. Checking the V-belt 101
10. Checking the washer liquid 101
11. Checking and cleaning the engine and electrical wiring 101
12. Checking the evacuator valve 101
13. Checking the diesel particulate filter (DPF) muffler 102
14. Checking for exhaust leaks 102
15. Checking the electrical equipment 102
16. Checking the seat belt 102
17. Greasing bucket link pin 102
REGULAR CHECKS AND MAINTENANCE WORK 103
EVERY 50 SERVICE HOURS 103
1. Draining water from the fuel tank 103
2. Cleaning the water separator 103
3. Checking the battery condition 103
3.1 Charging the battery 104
4. Greasing the swivel bearing teeth 105

5. Checking the tracks 105
EVERY 100 SERVICE HOURS 105
1. Greasing the boom swing fulcrum 105
EVERY 150 SERVICE HOURS 105
1. Cleaning the air conditioner filter 105
EVERY 200 SERVICE HOURS 106
1. Adjusting the V-belt tension 106
1.1 Checking and adjusting the alternator belt tension 107
1.2 Checking and adjusting the fan belt tension 107
2. Checking the radiator hoses and clamps 108
3. Greasing the swivel bearing 108
4. Inspecting and cleaning the air filter element 108
5. Checking the fuel line 109
6. Checking the intake air line 110
7. Checking the air conditioner condenser 110
EVERY 250 SERVICE HOURS 110
1. Greasing the front attachments (not including the bucket pin and the boom swing fulcrum) 110
2. Greasing the pilot valve linkage 111
3. Changing the engine oil 111
4. Replacing the engine oil filter cartridge 112
EVERY 500 SERVICE HOURS 112
1. Replacing the water separator filter element 112
2. Changing the travel motor gear oil 113
3. Replacing the fuel filter cartridge 113
4. Replacing the hydraulic return filter cartridge 114
EVERY 1000 SERVICE HOURS 114
1. Replacing the hydraulic pilot filter element 114
2. Changing the hydraulic oil 115
3. Checking the hydraulic oil (hydraulic hammer operation) 116
4. Cleaning the pilot line filter 117
5. Checking the engine valve clearance 117
EVERY 1000 SERVICE HOURS OR ONCE A YEAR 117
1. Replacing the air filter element 117
EVERY 1500 SERVICE HOURS 117
1. Checking the injector tip 117
2. Replacing the oil separator element 117
3. Checking the EGR cooler 118
EVERY 2000 SERVICE HOURS 118
1. Changing the front idler and track roller oil 118
2. Checking the alternator and starter motor 118
EVERY 3000 SERVICE HOURS 118
1. Checking the EGR system 118
2. Checking the turbo charger 118
ANNUAL SERVICING 118
1. Checking the electrical wiring and fuses 118
2. Checking the air conditioner pipes and hoses 118
3. Checking the exhaust manifold (cracks, gas leakage, and mounting screw) 118
4. Checking the intake air line for air leaks 118
5. Checking the boost sensor 118
6. Checking the air flow sensor 119
7. Checking the DPF 119
8. Checking the DPF differential pressure sensor and piping for gas leaks 119
9. Checking the DPF exhaust gas temperature sensor 119
10. Checking the EGR piping for gas leaks 119
BIENNIAL SERVICING 119
1. Replacing the air conditioner pipes and hoses 119
2. Replacing radiator hoses and hose clamps 119
3. Changing the radiator coolant 119

4. Replacing the fuel line ... 120
5. Replacing the intake air line ... 121
6. Replacing the oil separator rubber hose ... 121
7. Replacing the DPF differential pressure sensor rubber piping (front and back) ... 121
8. Replacing the suction pipe downstream the air flow sensor ... 121
9. Replacing the boost sensor pressure rubber piping ... 121
10. Replacing the EGR cooler hose ... 121
11. Replacing the hydraulic hoses ... 121
SERVICING AS REQUIRED ... 121
1. Checking the refrigerant (gas) ... 121
2. Draining the water separator ... 122
3. Cleaning the DPF ... 122
4. Cleaning the plastic parts and synthetic leather ... 122
OTHER ADJUSTMENTS AND REPLACEMENTS ... 123
PURGING THE FUEL SYSTEM ... 123
ADJUSTING THE TRACKS ... 123
1. Adjusting steel tracks ... 123
2. Adjusting rubber tracks ... 124
3. Special information regarding the use rubber tracks ... 125
CHANGING THE BUCKET ... 125
FUSES ... 126
1. Replacing fuses ... 126
2. Replacing slow-blow fuses ... 127
3. Electric fuse ... 128
TROUBLESHOOTING ... 129
TROUBLESHOOTING OF THE ENGINE AND OTHER SYSTEMS ... 129
OPERATION IN COLD WEATHER ... 131
PREPARATION FOR WORK IN COLD WEATHER ... 131
AFTER WORKING IN COLD WEATHER ... 131
LONG-TERM STORAGE ... 132
PREPARATIONS BEFORE LONG-TERM STORAGE ... 132
OPERATING THE MACHINE PERIODICALLY DURING LONG-TERM STORAGE ... 132
OPERATING THE MACHINE AFTER LONG-TERM STORAGE ... 133
PERIODIC REPLACEMENT OF PARTS ... 134
RECOMMENDED OILS ... 135
BIODIESEL FUEL (BDF) ... 137
REQUEST REGARDING FUEL USE AND MAINTENANCE OF CRS DIESEL ENGINES ... 138
APPENDICES ... 139
MAIN DIMENSIONS ... 139
LIFTING CAPACITY ... 140
IMPORTANT INFORMATION ... 140
LIFTING CAPACITY WITH RUBBER TRACKS ... 141
LIFTING CAPACITY WITH STEEL TRACKS ... 141
LIST OF SCREENS ... 142
NAVIGATION SCREENS ... 142
AUTOMATIC DIESEL PARTICULATE FILTER (DPF) REGENERATION ... 148
LOCKING AND RELEASING THE DIESEL PARTICULATE FILTER (DPF) REGENERATION ... 150
SOFTWARE INFORMATION ... 152
INDEX ... 153

SAFE OPERATION

The best way to prevent accidents is to follow the safety instructions and warnings in this manual, regulations, and safe operating practices.
Read and understand this manual before operating the machine.
Every user, however experienced, should carefully read and understand this manual and those of the attachments and accessories before operating the machine. The owner is obliged to inform the operators of these instructions in detail.
Store this manual in the storage location.
(See Where to keep the operator's manual on page 96.)

BEFORE OPERATING THE MACHINE

1. General

- Obey the safety labels on the machine.
- The seat belt must be inspected regularly and replaced if frayed or damaged.

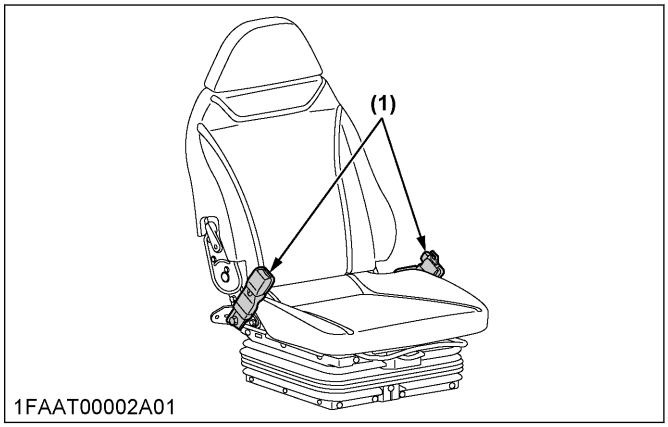

(1) Seat belt

- Always sit in the operator's seat when starting the engine or operating levers or controls.
- Study control lever pattern A and pattern B. Then choose the one which feels most familiar.
  Familiarize yourself with the pattern selected by operating the machine slowly and at low engine speed.
  – Engage the lever lock to prevent accidental pattern change.

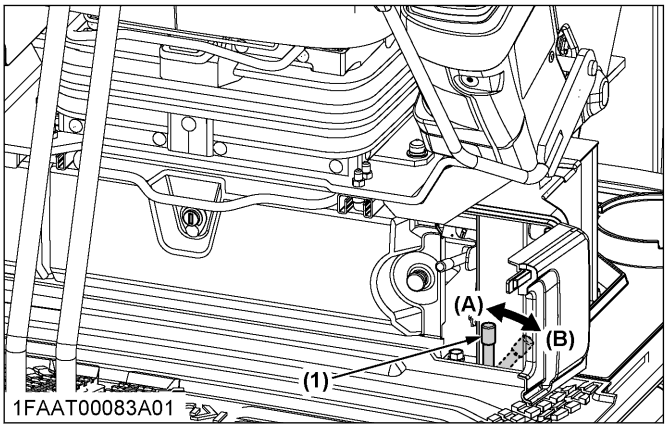

(1) Pattern selector lever (two Pattern Selection System: TPSS)
(A) Pattern A
(B) Pattern B

- Do not operate the machine while under the influence of alcohol, medication, controlled substances or while fatigued.
- Check the surroundings carefully before using the machine or when attachments are being attached.
  – Pay attention to overhead clearances with electric wires.

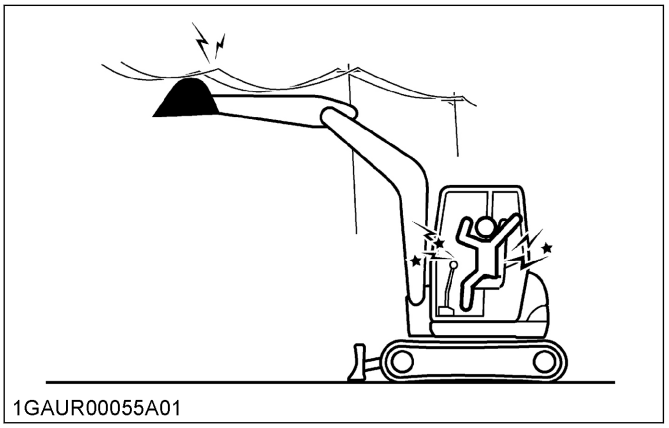

  – Check for pipes and buried cables before digging.
  – Check for hidden holes, obstacles, soft underground, and overhangs.

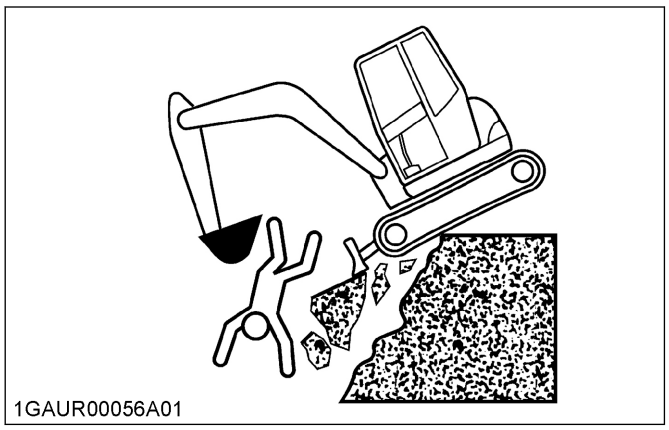
1GAUR00056A01

  - While using the machine, do not allow any persons within the working range.
  - Check local regulations and contact Before You Dig Australia (http://byda.com.au).
- Do not allow other persons to use the machine before having informed them of the exact operation and work instructions, and make sure that they have read and fully understood the operator's manual.
- Do not wear baggy, torn or oversized clothing when working with the machine as such clothing can get caught in rotating parts or control elements which can cause accidents or injuries. Wear adequate safety clothing, such as a safety helmet, safety shoes, eye protection, ear protection, and working gloves, as necessary and as prescribed by law or other standards or regulations.

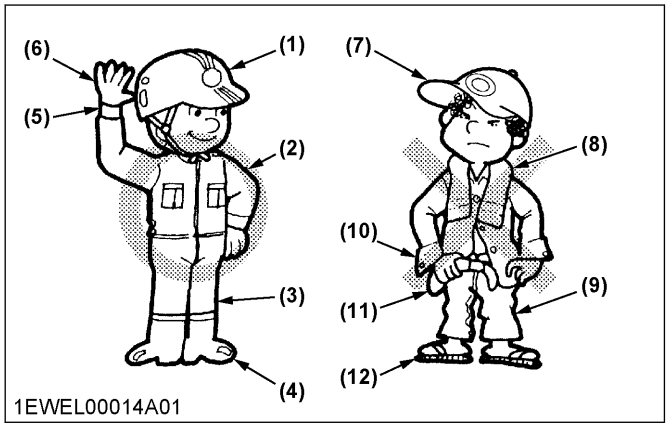

1EWEL00014A01

(1) Helmet
(2) Clothing fit for work
(3) Tight seams
(4) Good grip footwear
(5) Well fitting cuffs
(6) Working gloves
(7) Soft hat
(8) Towel
(9) Baggy trousers
(10) Loose cuffs of the shirt
(11) Baggy shirt
(12) Sandals or open-toed shoes

- Do not allow passengers to ride on any part of the machine at any time. The operator must remain in the machine seat during operation.
- Check mechanical parts for wear, and make sure that they are correctly adjusted. Replace worn or damaged parts immediately. Check nuts and bolts regularly to make sure that they are tightened to the correct torque.
- Keep your machine clean. Heavy soiling, grease, dust and grass can cause fires, accidents or injuries.
- Use only Kubota's authorized attachments.
- Before starting the machine, be absolutely sure that the machine has been filled with fuel, lubricated, greased and undergone all necessary maintenance.
- Do not modify the machine.
- Do not operate a hydraulic hammer on anything that is above the operator's seat level as objects may fall into the operator station.
- Make sure that attachments, particularly those utilizing quick attach systems, are securely mounted.
- Install protective guards on the machine when working in areas where objects may fall or be thrown.

2. ROPS and OPG

- For your safety, a roll-over protective structure (ROPS) with a seat belt or operator protective guard, top guard level I (OPG, top guard level I) with a seat belt is installed by Kubota.
  The OPG (top guard level I), in accordance with ISO10262, is equivalent in definition to a falling object protective structure (FOPS).
- Always use the seat belt when the machine is equipped with a ROPS and OPG (top guard level I) as this combination will reduce the risk of serious injury or death in case of machine tip-over or instability, or in case of falling objects.
- Do not modify any structural members of the ROPS and OPG (top guard level I) by welding, drilling, bending, grinding or cutting, as this may weaken the structure.
- If any component is damaged, replace it. Do not attempt repairs.
- If the ROPS and OPG (top guard level I) is loosened or removed for any reason, make sure all parts are reinstalled correctly. Tighten the mounting bolts to the proper torque.
- The ROPS meets the requirements of ISO 12117-2. The OPG (top guard level I) meets the requirements of ISO 10262.
- Never operate the machine when the operating mass, including the operator, exceeds the maximum permissible total weight indicated on the ROPS identification plate.

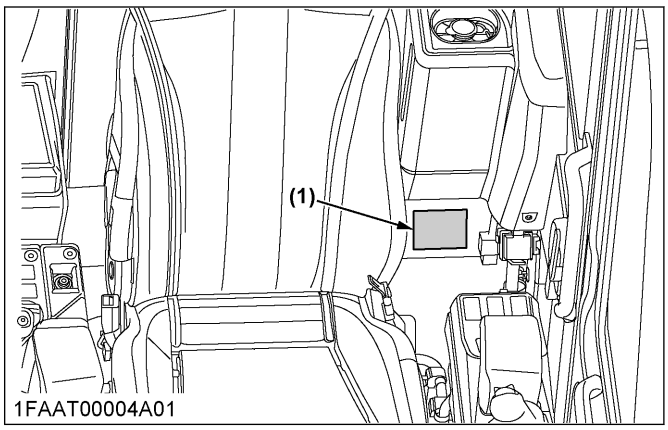

(1) ROPS identification plate

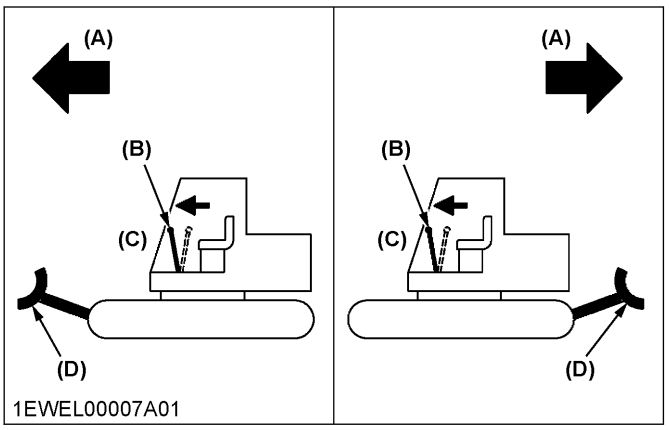

(A) Travel direction
(B) Drive levers
(C) Front
(D) Dozer blade

OPERATING THE EXCAVATOR

1. Starting to operate the machine

- Get into and out of the machine safely. Always face the machine. Always use handrails and available steps and keep yourself well balanced. Do not hold any of the control levers or switches. Do not jump on or off the machine, whether stationary or in motion.
- Start and control the machine only from the operator's seat. The driver should not lean out of their seat when the engine is running.
- Before starting the engine, make sure that lock levers are in the LOCK positions, all control levers and pedals are in their *"NEUTRAL"* positions, and the seat belt is fastened correctly.
  Before starting the engine, make sure that the control levers, travel lever, pedals, and other control elements are not stuck and can be moved smoothly.
  If any issues are found, immediately pinpoint the cause and correct it.
- Be mindful of the location of the dozer blade while traveling (the dozer must be raised). If the levers are activated with the dozer blade at the rear, the tracks will move in the opposite direction of the drive levers.

2. Working the machine

- Do not operate or idle engine in a non-ventilated area. Carbon monoxide gas is colorless, odorless, and deadly. If you experience the initial symptoms of low to moderate CO poisoning, which include headaches, fatigue, shortness of breath, nausea, or dizziness, stop operation, and seek medical attention.

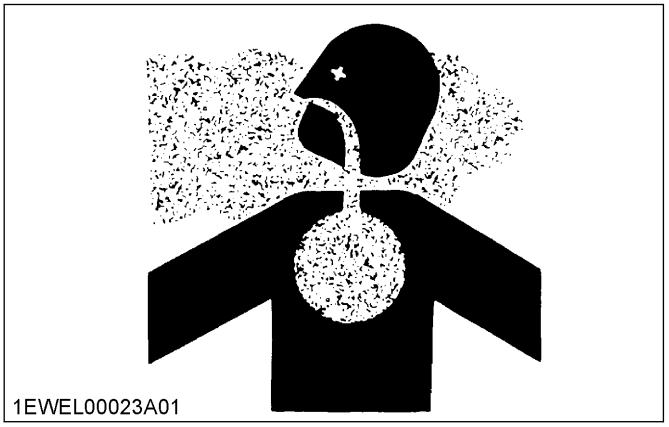

- Keep all safety equipment and covers in place. Replace damaged or missing safety devices.
- When operating the machine, keep hands and body inside of the ROPS and OPG (top guard level I) protective envelope. Do not touch or depress the control levers or the pedals from outside of the protective structure of the operator's platform while the engine is running.
- Operate the machine so that it does not tip over. Keep away from steep slopes and embankments. Do not swing the bucket downhill. Lower the dozer when operating the attachment. Keep the bucket as low as possible while driving uphill. Turn slowly on slopes (at reduced speed). Do not place the machine near the edges of trenches and banks, as the earth can give way due to the weight of the machine.

Never cross an incline horizontally or at an angle, as it can cause the machine to roll over. Approach inclines head-on to avoid the loss of control.
Avoid performing any work with the machine when it is on an incline, as this could cause the machine to become unbalanced and roll over. Always take care when moving the machine on an incline.

Allowable climbing angle	36% (20 degrees)

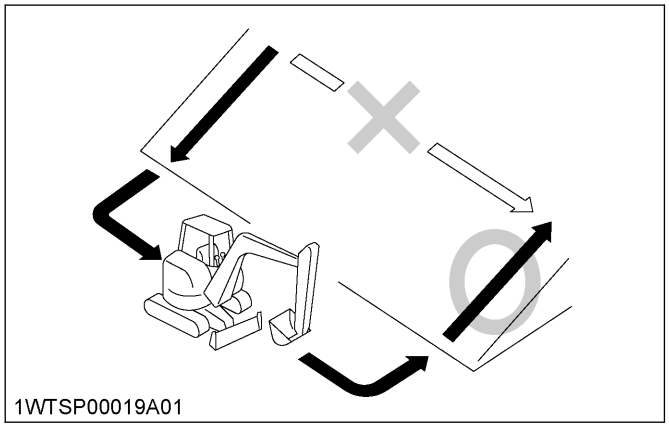
1WTSP00019A01

- Always pay close attention to the area to which the machine is being moved.
- Do not change direction on steep slopes, as the machine could roll over.
- Before changing direction, be aware of people in the work area.
- Details regarding the operation of the machine can be found in a different section.
(See OPERATION OF A NEW MACHINE on page 66.)

3. Safety for children

Tragedy can occur if the operator is not alert to the presence of children. Children generally are attracted to machines and the work they do.

- Never assume that children will remain where you last saw them.
- Keep children out of the work area and under the watchful eye of another responsible adult.
- Be alert and shut your machine down if children enter the work area.
- Never carry children on your machine. There is no safe place for them to ride. They may fall off and be run over or interfere with your control of the machine.
- Never allow children to operate the machine even under adult supervision.
- Never allow children to play on the machine or on the attachments.
- Use extra caution when backing up. Look behind and down to make sure the area is clear before moving.

4. Handling the diesel particulate filter (DPF)

- For proceeding to regenerate the Diesel Particulate Filter (DPF), an indicator appears on the display to tell you to increase the engine rpm to its specified level. Follow that instruction.
- When the DPF is in the regenerating cycle, the exhaust gas and the DPF muffler become hot. During regeneration, take into account that the muffler will be very hot and keep the machine away from other people, animals, plants, and flammable material. Also keep the area near the DPF muffler clean and away from flammable material.
- The exhaust gas caused by DPF regeneration may adversely affect people, animals and plants. Before this action, look around the machine for added safety.
- During DPF regeneration keep the surrounding environment in mind. Do not allow the ambient temperature to rise excessively due to heat from the regeneration. If such occurs activate the inhibit switch.

AFTER OPERATION

Before leaving the machine:

- Park the machine on a firm, flat and level surface.

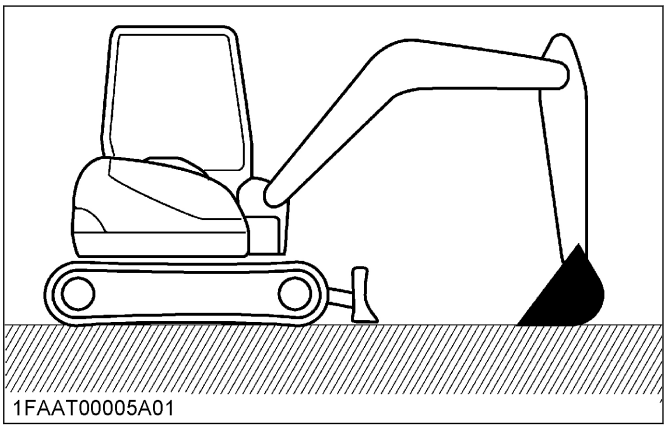
1FAAT00005A01

If this is not possible, put the bucket on the ground and place all control levers in their *"NEUTRAL"* positions, then brace the tracks with chocks.

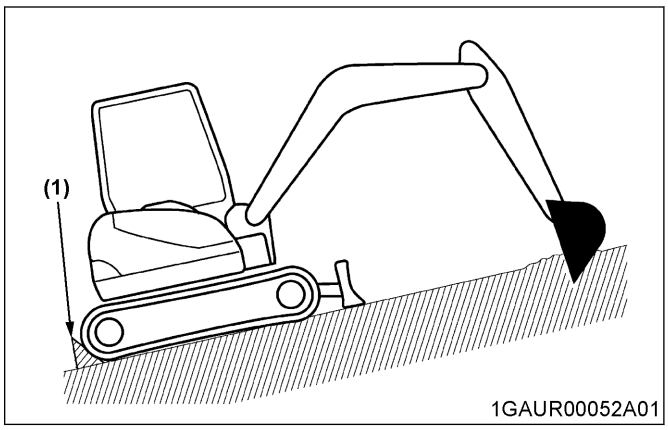

(1) Chock

Park the machine in such a way that it cannot move and is secured against unauthorized use.
Do not park the machine anywhere there are combustible materials such as dried grass or straw.

- Lower the attachments and the dozer blade to the ground.
- Stop the engine.
- Release the pressure from the hydraulic system.
- Set the pilot control lock lever to the *"LOCK"* position.

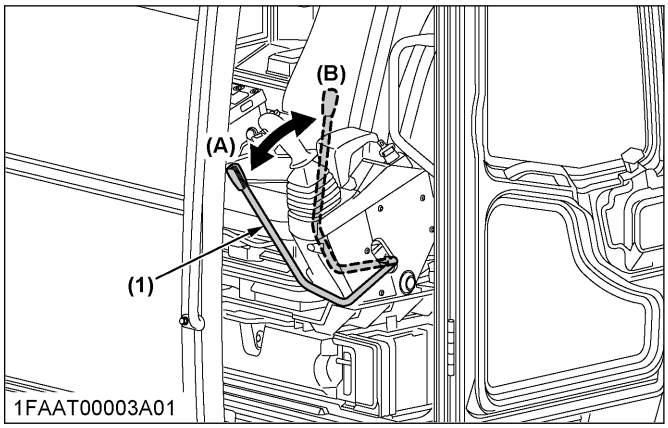

(1) Pilot control lock lever
(A) UNLOCK
(B) LOCK

- In case of a heavy accumulation of dirt in the area of the tracks and the hinges on the front attachments, clean the excavator.
(See PRECAUTIONS WHEN WASHING THE MACHINE on page 90.)

SAFE LOADING AND TRANSPORT OF THE MACHINE

- Observe all regulations concerning the transport of machine on public roads.
- Use adequately long and robust ramps when loading the machine.
(See TRANSPORTING THE MACHINE on page 84)
- Do not change the running direction. To avoid tipping over, do not try to swing the attachment crosswise to the loading ramps.
- Lower the attachment on the loading bed and release the pressure from the hydraulic system. Then, stop the engine.
Secure the tracks with blocks and chain down the machine. After loading the machine on the vehicle, securely chain down the undercarriage of the machine using suitable chains, tensioners, and approved methods.

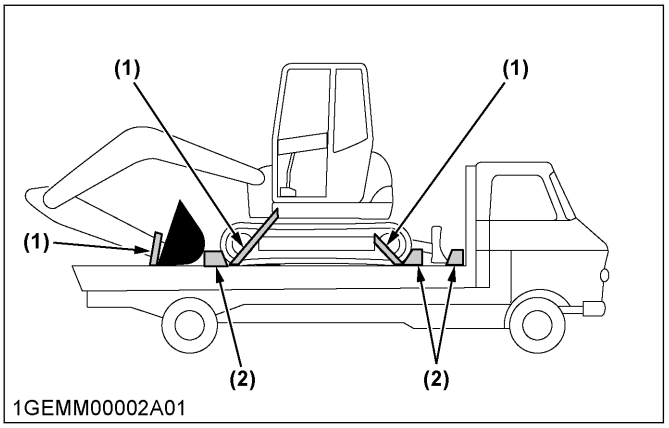

(1) Chain
(2) Block

- Avoid abrupt braking of the vehicle with the machine loaded. Sudden braking causes the machine to move and may cause a serious accident.
- When towing another machine or pulling a load, the load must be less than the strength of the towing line attached to machine. The towing eye should not be used to tie down or lift the machine.

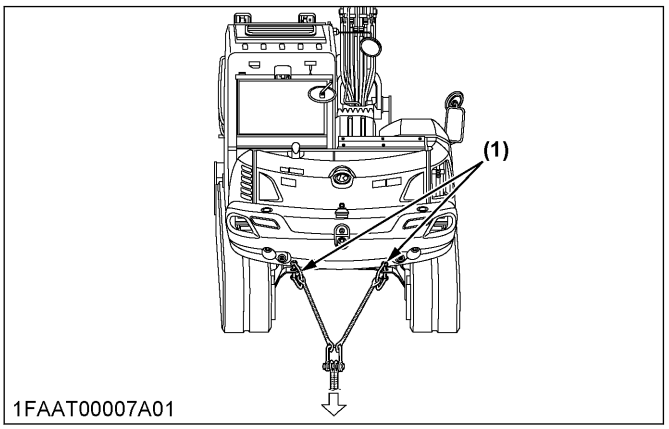

(1) Hook

Maximum drawbar pull at coupling hook	116.9 kN (11920 kgf)
Maximum vertical load at coupling hook	12.1 kN (1234 kgf)

NOTE :
- **– These figures are based on a machine with a CAB and steel tracks.**

- Do not use the hooks on the roof of the CAB for lifting the machine.

MAINTENANCE

1. Precautions when performing checks or maintenance

Before doing maintenance work on the machine, park the machine on a firm, flat and level surface, lower the attachments to the ground, stop the engine, release pressure trapped in the hydraulic system, and lock all control levers. When dismantling hydraulic parts, make sure that the hydraulic oil has cooled down sufficiently to avoid burns. Start maintenance work carefully, such as loosening a plug slowly so that oil will not squirt out.

- Before doing work on the engine, the exhaust system, the radiator and the hydraulics, let the machine cool down sufficiently.
- Always turn off the engine when filling the fuel tank. Avoid spilling and over-filling of fuel.
- Keep a first aid box and a fire extinguisher handy at all times.
- Use eye protection and a face mask to protect the eyes and respiratory system against dust and other foreign particles.

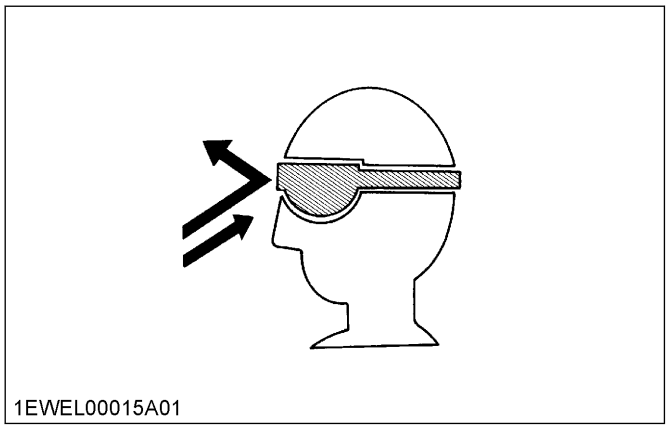
1EWEL00015A01

- Inspect ROPS and OPG (top guard level I) for damage and if damage is found contact your Kubota dealer for repairs.
- Kubota does not use components which contain asbestos and recommends against the use of such components.
- To prevent personal injury or death, use explosion-proof lighting when working on, inspecting, or using fuel, oil, coolant, or battery fluid.
  If you do not use the explosion-proof lighting or if it breaks, it can ignite and cause fire, injury, or death.
- Prohibit unauthorized persons from entering the work area to prevent injury caused by debris flying off of machine parts during grinding, welding, using a hammer, or other tasks.
- Make sure that the work area is clear and safe. Work on a firm, level surface with adequate lighting. Work in well-ventilated area if you work indoors.
  Make sure that the area is free from any potentially dangerous conditions such as obstacles or slippery surfaces.
- Make sure that the machine is clean and free of debris.
  - – Always remove any debris from the machine and clean it before performing maintenance or repair work.
  - – Before washing or cleaning the machine using water, stop engine and make sure that all of the electrical parts and devices are covered. Any water seepage into the electrical wiring on the machine can cause a short circuit or cause the controls to malfunction. Never use water or steam to clean any of the electrical parts and devices, such as the battery, the sensors, or the connectors.

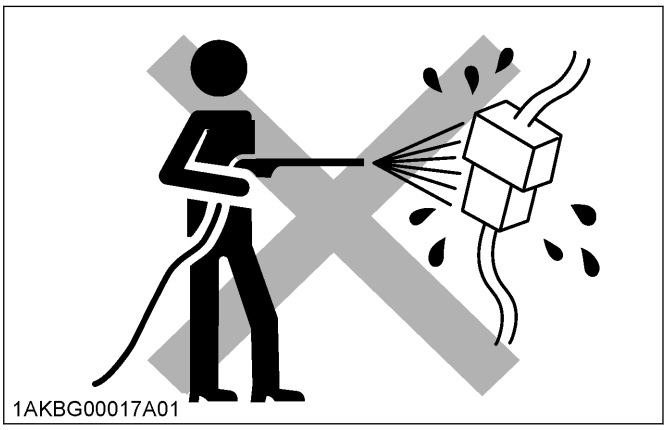
1AKBG00017A01

- Always make sure that the engine is stopped before performing any maintenance or repairs. Otherwise, clothing, tools, hands, or other parts of the body can get caught in moving parts of the machine, causing personal injury or death.

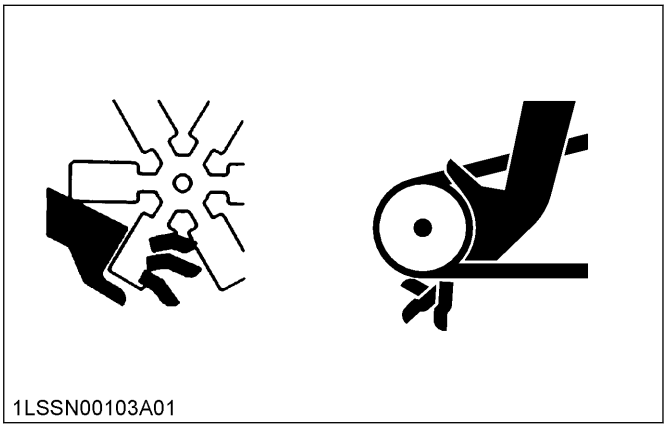
1LSSN00103A01

- Do not lubricate or mechanically adjust while the engine is running, even if the machine is stationary.
- Exercise caution when refueling:
  - – Never smoke cigarettes or permit the use of fire while refueling or in the vicinity of refueling.

– Always make sure that the engine is off before removing the fuel cap to refuel the tank. Avoid getting fuel on any hot components.
– Keep control of the fuel-filler-nozzle while refueling.
– Never overfill the tank with fuel. Leave room for thermal expansion.
– Always remove any excess or spilled fuel immediately.
– Always make sure that the fuel-tank-cap is securely reinstalled.
Replace the fuel-tank-cap only with a manufacturer-approved cap whenever it becomes damaged. Use of the wrong type of cap may not allow for proper venting, causing pressure in the tank to build up.
– Never use fuel to clean the machine.
– Always use the correct type of fuel for the machine and the temperature in which it is being operated.
– Always use a properly grounded fueling system.

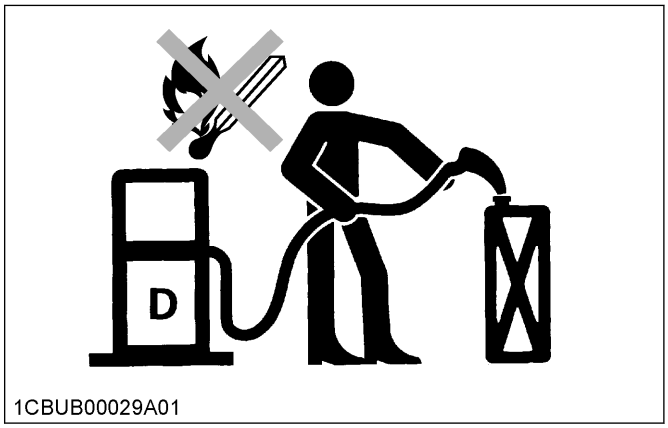

1CBUB00029A01

• Use caution when working around hot and pressurized components.
– Always allow the engine to cool sufficiently before performing any maintenance, inspection, or repairs.
– Never touch any parts such as the engine, the muffler, the radiator, the hydraulic lines, or the sliding parts as they may be very hot immediately after the machine has been running and can cause burning. Allow the engine, the muffler, the radiator, the hydraulic lines, and the sliding parts to cool sufficiently before touching them.
– Always use sufficient care whenever removing the caps and plugs on the coolant, oil, and hydraulic fluid as they are hot and pressurized and can cause burning and injury from spraying of hot fluid.

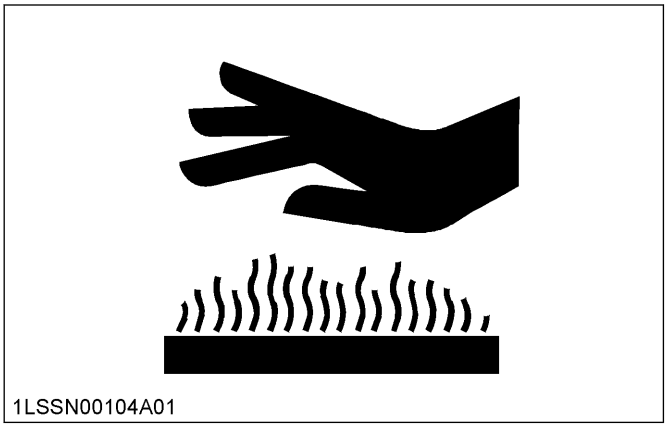
1LSSN00104A01

• Always carefully check the machine after performing any maintenance or repairs.
Confirm that no oil, water, or any other fluid is leaking from any parts that had been serviced by carefully inspecting the parts.
Gradually speed up the engine from a low speed to higher speed to check operation.

2. Handling the engine

• To avoid hazardous voltage, turn the starter switch to the **[STOP]** position if it is necessary to check to repair the computer, harness or connectors.
• Do not open high-pressure fuel system. High-pressure fluid remaining in fuel lines can cause serious injury. Do not disconnect nor attempt to repair fuel lines, sensors, or any other components between the high-pressure fuel pump and injectors on engines with high-pressure common rail fuel system.

3. Handling the battery

• Do not use or charge a refillable type battery if the fluid level is below the **[LOWER]** (lower limit level) mark. Otherwise, the battery component parts may prematurely deteriorate, which may shorten the battery's service life or cause an explosion. Check the fluid level regularly and add distilled water as required, so that the fluid level is between the **[UPPER]** and **[LOWER]** levels.
• To avoid sparks from an accidental short circuit, always disconnect the ground cable (-) of the battery first and reconnect it last.
• Read and follow the instructions when starting with an auxiliary battery.
(See STARTING WITH AN AUXILIARY BATTERY on page 63.)

4. Handling the radiator

• Do not open the radiator cap before the radiator has cooled down sufficiently.

Once the radiator has cooled sufficiently, loosen the cap to the first stop and allow the system enough time to release the remaining pressure. Then loosen the cap completely.

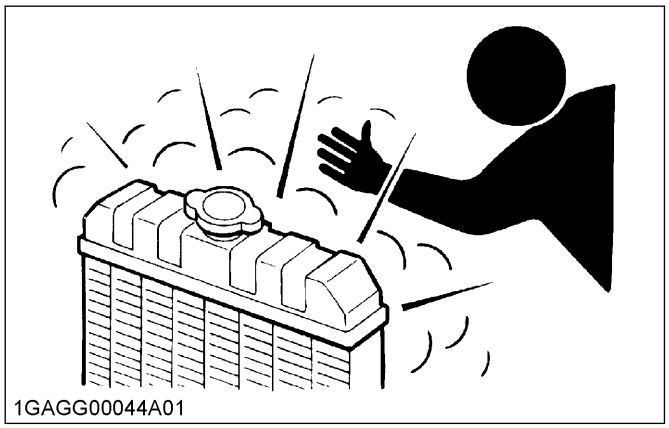
1GAGG00044A01

5. Handling the hydraulic components

- Make sure that pressure from all systems is sufficiently released before performing any maintenance or repairs. Oil or other fluids could be released when caps or filters are removed before the pressure has been stabilized in the hydraulic system.
  - Gradually release internal pressure build-up by standing out of the line of any possible spray and slowly removing plugs, screws, or disconnect hoses.
- Leaking hydraulic fluid has enough pressure to penetrate the skin and cause serious injuries. Leakages from pin holes can be totally invisible. Do not use hands for checking for leaks. Always use a piece of wood or cardboard. It is strongly recommended that you use a face shield or eye protection.
  In case of injuries caused by leaking hydraulic fluid, contact a doctor immediately. This fluid can cause gangrene or serious allergic reactions.

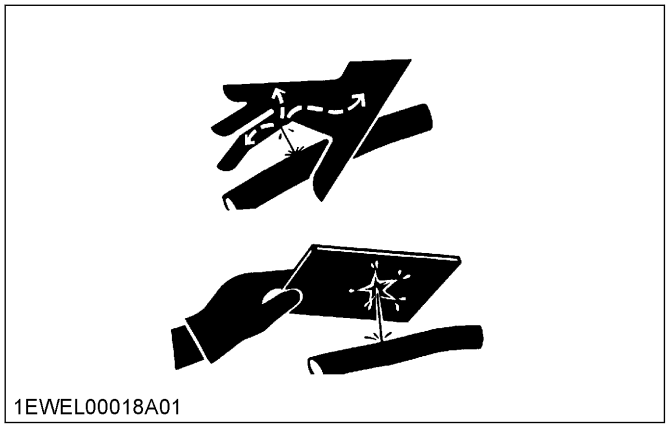
1EWEL00018A01

6. Precautions when using the front attachments to lift the machine

- Securely support the machine with stands or suitable blocking before working underneath. For your safety, do not work under any hydraulically supported devices. They can settle, suddenly leak down, or be accidentally lowered.

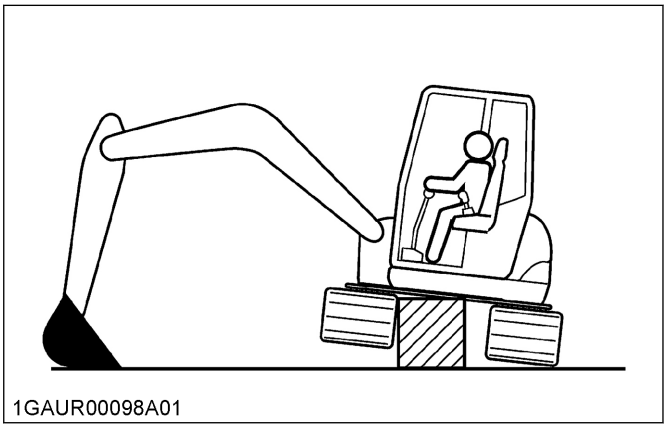
1GAUR00098A01

- When lifting the machine itself with an attachment, place a safety block or safety post to prevent the machine from rolling over. Keep the pilot control lock lever in the LOCK position.

7. Precautions when adjusting the tracks

- Do not dismantle the spring of the track tensioner. If dismantling is necessary, contact your Kubota dealer. The assembly must be done according to the Kubota work shop manual (WSM) for the product involved.
- Always use care whenever using grease that is pressurized.
  - Always follow the proper procedure to adjust tension.
    Grease in the track adjuster is pressurized and improper release can cause the grease fitting to fly off, causing personal injury or death.
  - Always loosen the grease fitting slowly.
  - Avoid standing in front of, or putting any parts of the body in the line of the grease fitting.
  - If no grease is released when the grease fitting is loosened, the machine has a malfunction. Do not perform repairs of any kind yourself and contact the local dealer for repairs. If no grease is released when the grease fitting is loosened, any operation of the machine can be very dangerous.

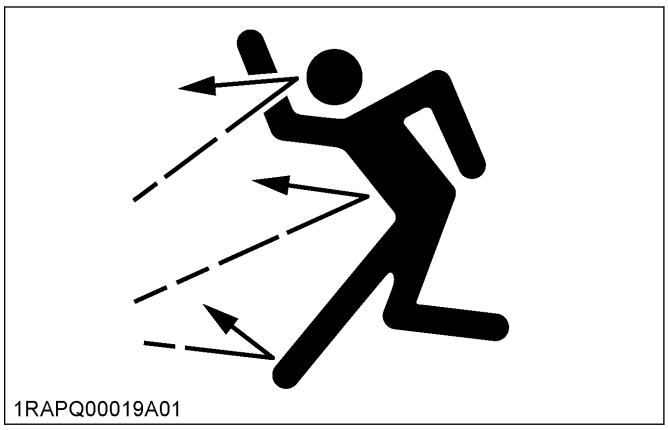
1RAPQ00019A01

8. Fire prevention

- The machine and some attachments have components that are at high temperatures under normal operating conditions. The primary source of high temperatures is the engine and exhaust system. The electrical system, if damaged or incorrectly maintained, can be a source of arcing or sparks.
  The following fire prevention guidelines will help to keep the risk of fire to a minimum.
  – Smoking is prohibited while refueling or handling the battery. Keep sparks and fire away from the fuel tank and battery. Flammable gases escape from the battery, especially during charging.
  – Blow off all accumulated debris near hot engine exhaust components such as the turbocharger, exhaust manifold, exhaust pipes and muffler. Do this more frequently when working in severe conditions.
  – Clean out all accumulated flammable materials and debris from inside the belly pans on the machine, from inside the lower structures, and from the area around the engine. Flammable materials include, for example, leaves, straw, pine needles, branches, bark, and small wood chips.
  – Make sure that no flammable materials come into contact with the hot exhaust pipe during or after use, or when the machine is parked or stopped. Additionally, after pressure washing, check that no flammable materials have accumulated around the exhaust pipe. Grass, twigs, or other organic debris under the hood may cause fire.
  – Inspect all fuel lines and hydraulic hoses for wear or for deterioration. Replace them immediately if they begin to leak.
  – Examine electrical wiring and connectors frequently for damage. Repair any wires that are loose or frayed before operating the machine. Clean all electrical connections and tighten them as necessary.
  – Inspect the exhaust system daily for any signs of leakage. Check for broken pipes and muffler and also for loose or missing bolts, nuts and clamps. If any exhaust leaks or fractured parts are found, repairs must be completed prior to operation.
  – Always keep a multipurpose fire extinguisher on or near the machine. Be familiar with the operation of the fire extinguisher.
  – Do not weld on pipes or tanks containing flammable liquids. Do not gas cut pipes or tanks containing flammable liquids. Before doing any such work, carefully drain any flammable fluids. Then clean pipes and tanks thoroughly with a non-flammable solvent before welding or cutting.

WASTE MATERIAL

- Always make sure that any material and waste products from the repair and maintenance of the machine are collected into proper containers using a funnel, or other device.
  Dispose of waste material properly to avoid pollution and contamination of the environment.
- Consult local regulations and codes when disposing of oil, fuel, engine coolant, refrigerant, solvents, filters, batteries, and any other potentially harmful and hazardous material or substance.

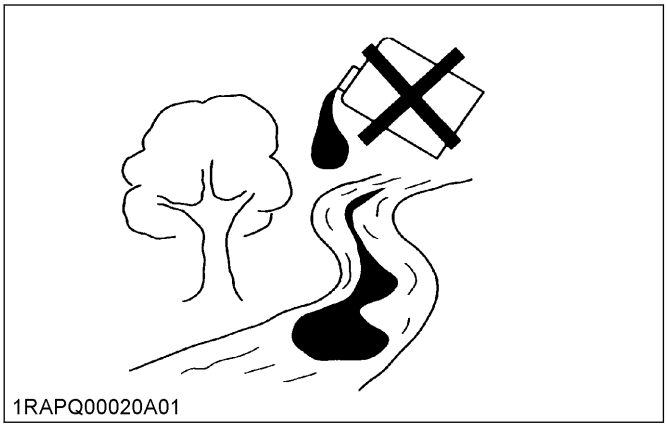
1RAPQ00020A01

SAFETY LABELS

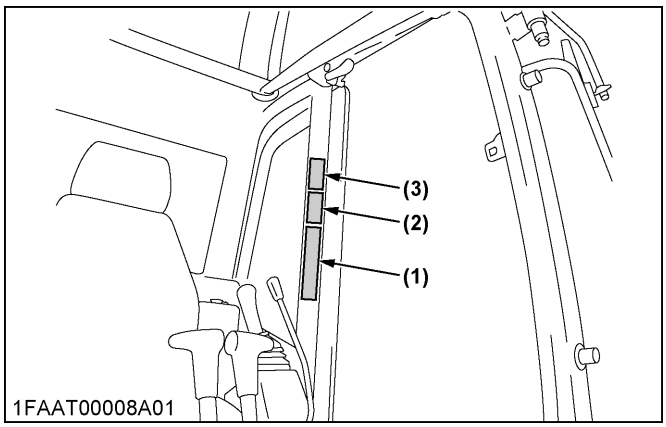

(1) Part No. RD838-5728-1

⚠ WARNING

TO AVOID PERSONAL INJURY OR DEATH:

1.Read and understand operator's manual before attempting to start or operate the excavator. Read the manual of the attachment to do a correct operation safely when other attachments are installed instead of Kubota specified bucket.

2.Before starting engine, make sure all control levers are in neutral and the operating area is clear of all bystanders.

3.Never allow passengers on any part of the excavator while operating.

4.Know your work area before starting operation.
- Check underground lines and cables.
- Stay off slopes too steep for safe operation.
- Check for hidden holes, obstacles or drop-offs and overhangs.

5.Make sure all shields are in place and securely fastened.

6.Before dismounting from the machine, lower all attachment to the ground, stop the engine and remove the key.

7.Damaged ROPS must be replaced, not repaired or revised.

IMPORTANT

Never use boom, dipper, or bucket to hammer or beat sideways.

Excavator is not intended for these usages.

(2) Part No. RD809-5736-1

⚠ DANGER

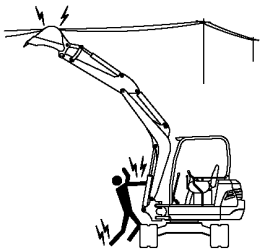

TO AVOID SERIOUS INJURY OR DEATH:

Check overhead clearance with electric wires.

(3) Part No. RD809-5738-2

⚠ WARNING

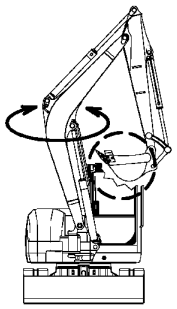

ATTACHMENT IMPACT HAZARD
KEEP ATTACHMENT AWAY FROM CAB AND MACHINE.
FAILURE TO DO SO MAY RESULT IN SEVERE INJURIES OR DEATH OR DAMAGE TO THE BOOMCYLINDER, HYDRAULIC HOSES OR THE CAB.

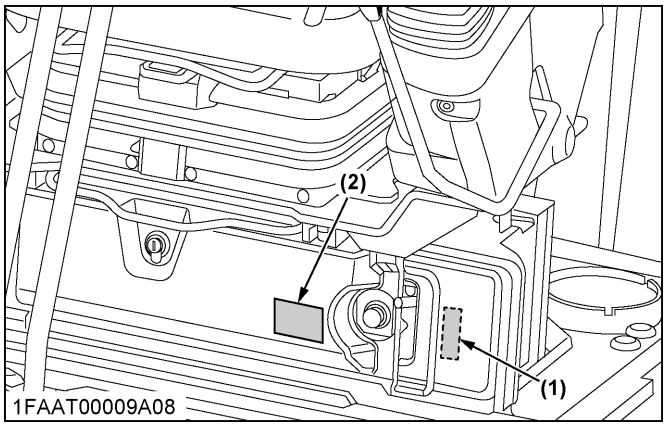

(1) Part No. RD858-5732-1

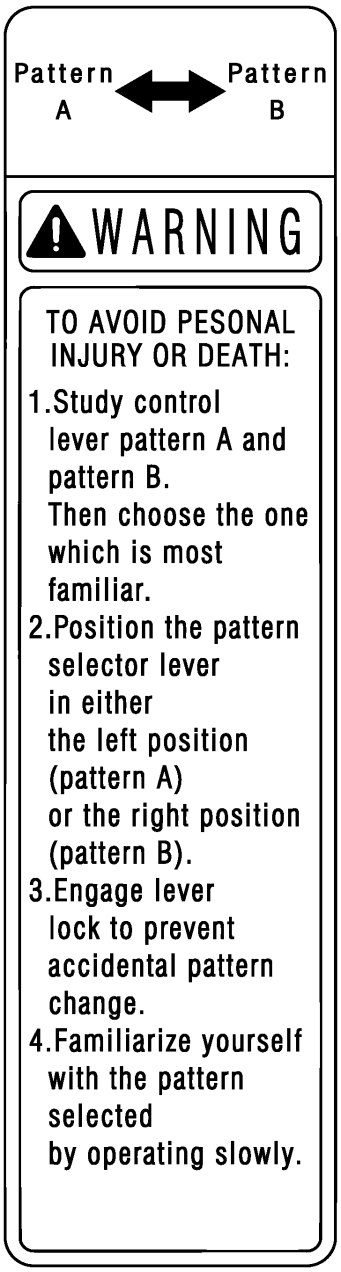

(2) Part No. RC488-5737-1



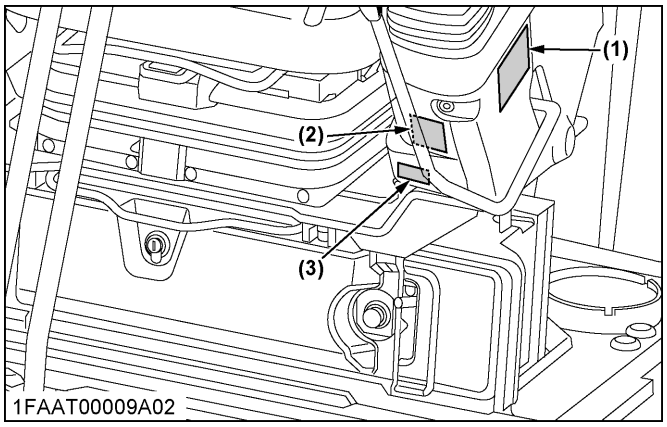

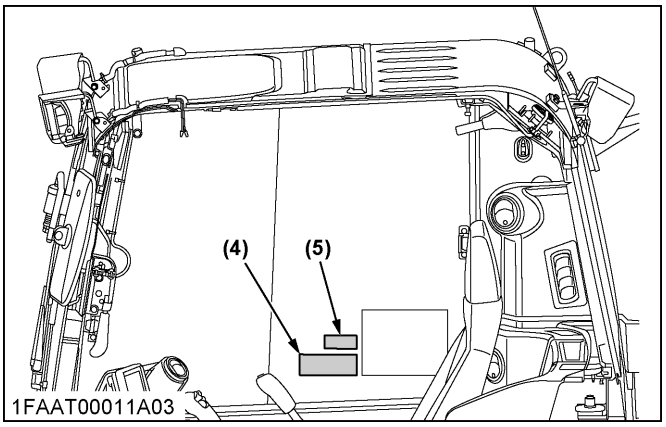

(1) Part No. RC488-5763-1



(2) Part No. RC488-5753-1



(3) Part No. RD579-5755-1
Never put your hands and fingers in the gap under the left console.

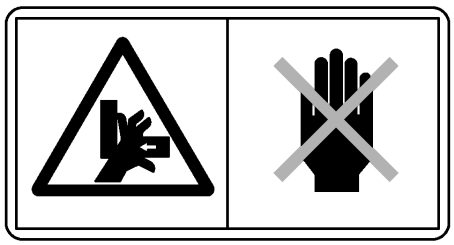

(4) Part No. RD809-5727-1

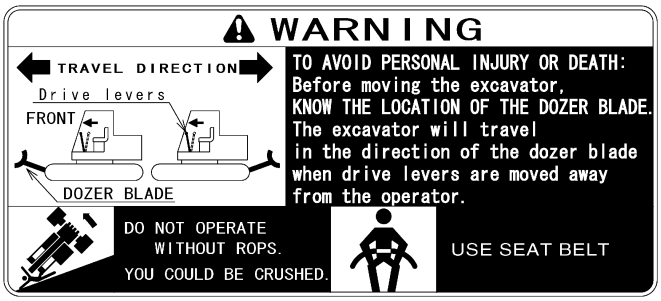

(5) Part No. RD358-5745-1

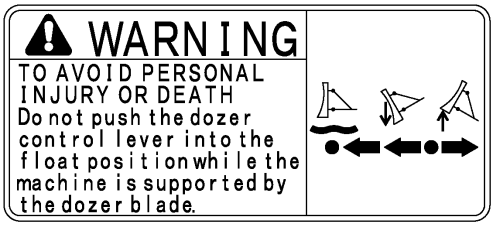

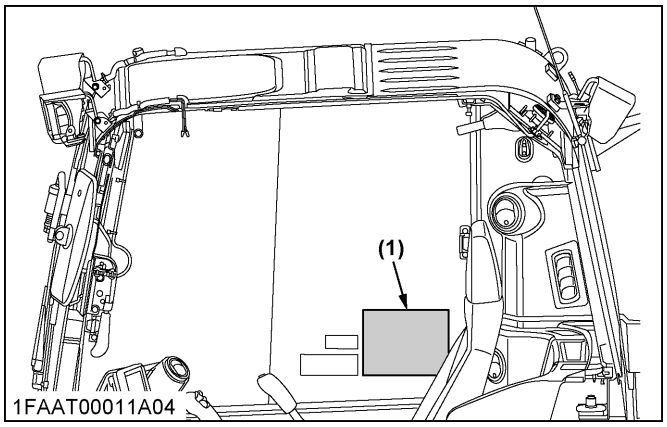

(1) Part No. RD858-5749-1

⚠ WARNING

TO AVOID PERSONAL INJURY OR DEATH:

- Do not move raised load over people.
- It is forbidden to lift loads greater than those values mentioned in the lifting capacity tables.
- The values mentioned in the table are valid only on even, hard grounds. When lifting on soft ground, the machine can tilt over due to the fact that the load is concentrated only on one side of the machine.
- The table values are calculated at the end of the arm without the bucket. In order to find the allowable loads for machines with bucket, the bucket weight must be subtracted from the values in the table.

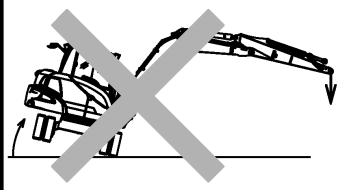

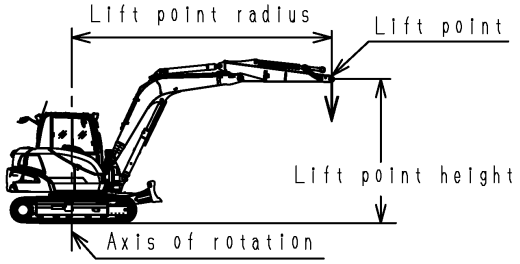

1. The lifting capacities are based on ISO 10567 and do not exceed 75 % of the static tilt load of the machine or 87% of the hydraulic lifting capacity of the machine.
2. The strokes are as follows.
   1) The load point corresponds to the front bolt part of the arm.
   2) The machine positions are (i) over-front (Blade down), (ii) over-front (Blade up), and (iii) over-side.
   3) The operating cylinder is the boom cylinder.
3. The bucket of the excavator, the hook, the sling and other lifting accessories are taken into consideration for the loads.

LIFT POINT HEIGHT (m)		LIFTING CAPACITY OVER-FRONT BLADE DOWN Unit=kN(kg)					LIFTING CAPACITY OVER-FRONT BLADE UP Unit=kN(kg)					LIFTING CAPACITY OVER-SIDE Unit=kN(kg)				
		LIFT POINT RADIUS(m)					LIFT POINT RADIUS(m)					LIFT POINT RADIUS(m)				
		MIN	3	4	5	MAX	MIN	3	4	5	MAX	MIN	3	4	5	MAX
GL	5			14.2 (1450)					14.2 (1450)					14.2 (1450)		
	4			15.2 (1550)	14.7 (1500)				15.2 (1550)	14.7 (1500)				15.2 (1550)	11.3 (1150)	
	3		21.6 (2200)	18.1 (1850)	16.2 (1650)			21.6 (2200)	18.1 (1850)	14.2 (1450)			21.6 (2200)	15.7 (1600)	10.8 (1100)	
	2		32.3 (3300)	22.5 (2300)	18.1 (1850)			30.9 (3150)	19.1 (1950)	13.7 (1400)			22.5 (2300)	14.7 (1500)	10.3 (1050)	
	1		40.7 (4150)	26.0 (2650)	20.1 (2050)	15.7 (1600)		28.4 (2900)	18.1 (1850)	13.2 (1350)	9.3 (950)		20.6 (2100)	13.7 (1400)	9.8 (1000)	6.9 (700)
	0		42.1 (4300)	27.9 (2850)	21.1 (2150)			27.4 (2800)	17.6 (1800)	12.7 (1300)			19.6 (2000)	13.2 (1350)	9.3 (950)	
	-1	18.6 (1900)	39.7 (4050)	27.4 (2800)	20.6 (2100)		18.6 (1900)	27.4 (2800)	17.2 (1750)	12.3 (1250)		18.6 (1900)	19.6 (2000)	12.7 (1300)	9.3 (950)	
	-2		34.3 (3500)	24.5 (2500)	17.2 (1750)			27.4 (2800)	17.2 (1750)	12.7 (1300)			19.6 (2000)	12.7 (1300)	9.3 (950)	
	-3		24.0 (2450)	15.7 (1600)				24.0 (2450)	15.7 (1600)				20.1 (2050)	13.2 (1350)		

Machine with ROPS cabin and rubber crawler, without bucket

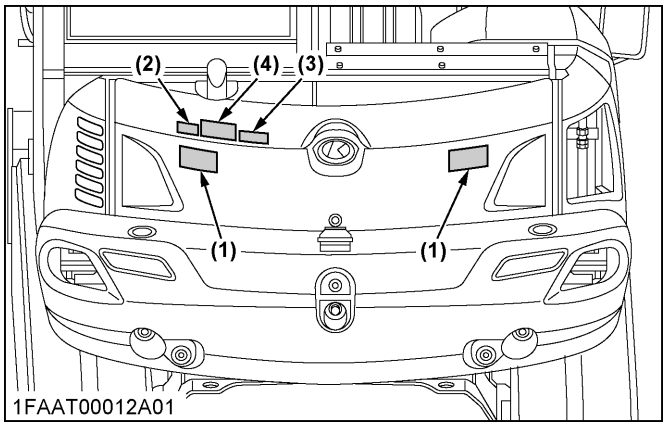

(1) Part No. RC788-5727-2
Do not allow any persons within the working range.

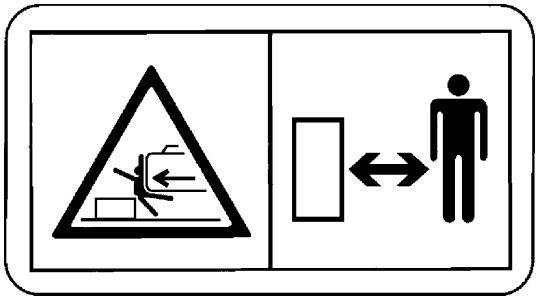

(2) Part No. RD579-5725-1
Do not touch hot parts such as the exhaust muffler.

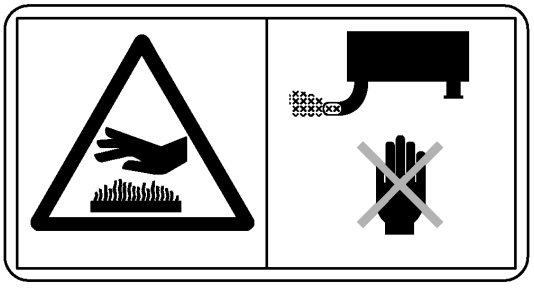

(3) Part No. RC488-5714-1



(4) Part No. TC660-9861-2



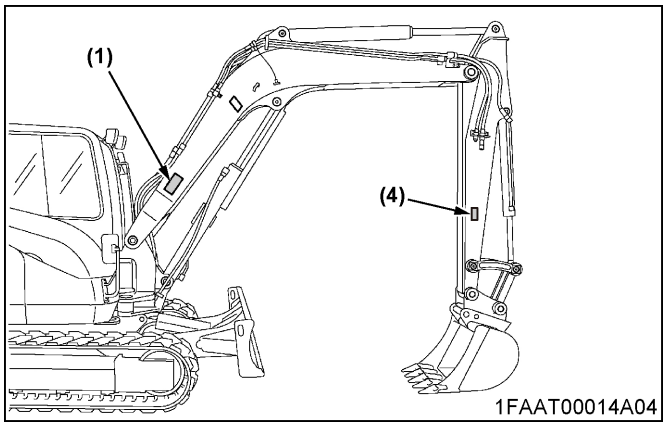

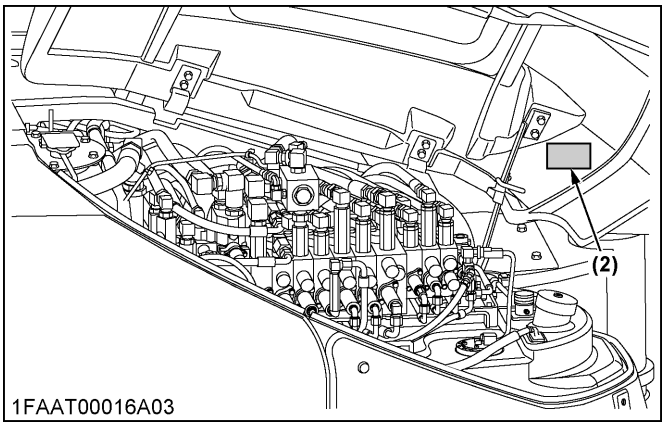

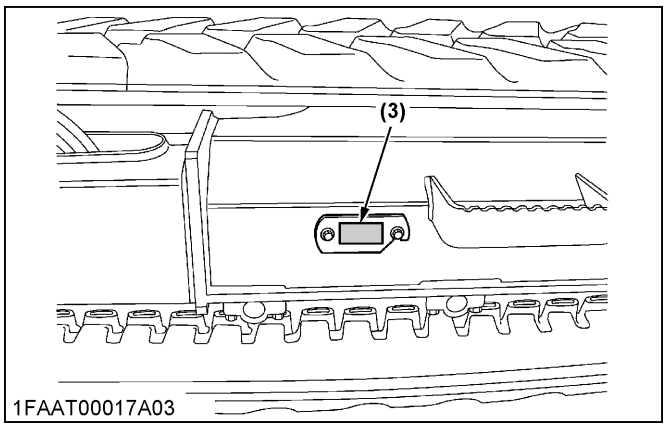

(1) Part No. 68328-5735-1 [Both sides]

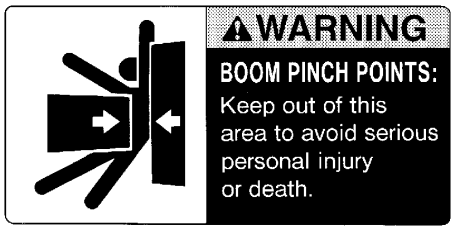

(2) Part No. RD858-5736-1

Diesel fuel only No fire



(3) Part No. RB456-5795-1 [Both sides]

Do not loosen the grease fitting completely or too quickly.

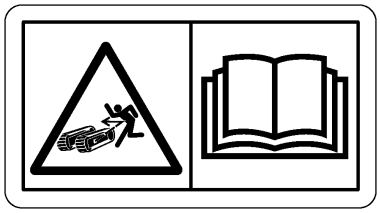

(4) RB456-5789-1 [Both sides]

Do not allow any person within the working range.

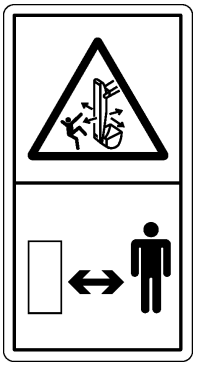

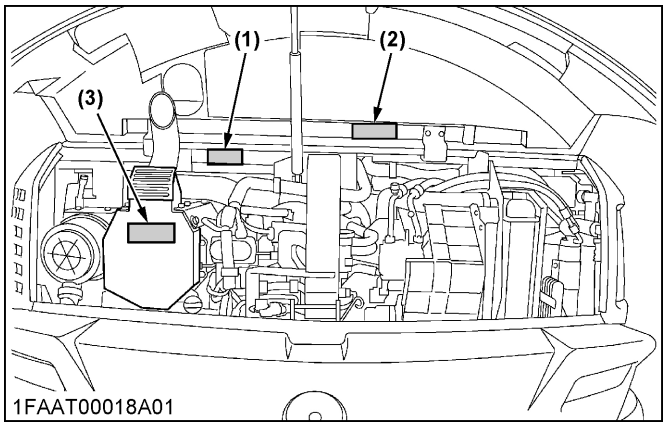

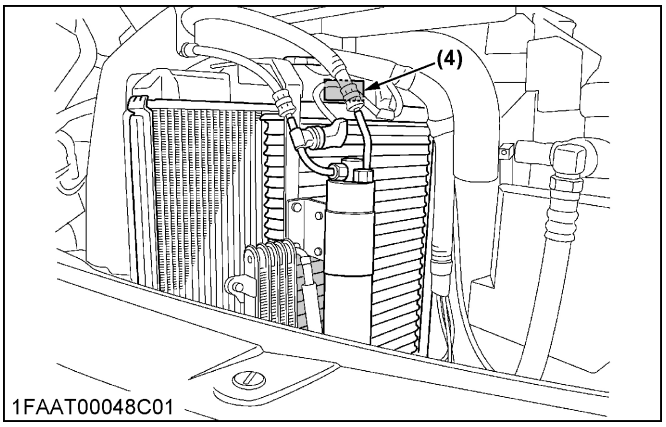

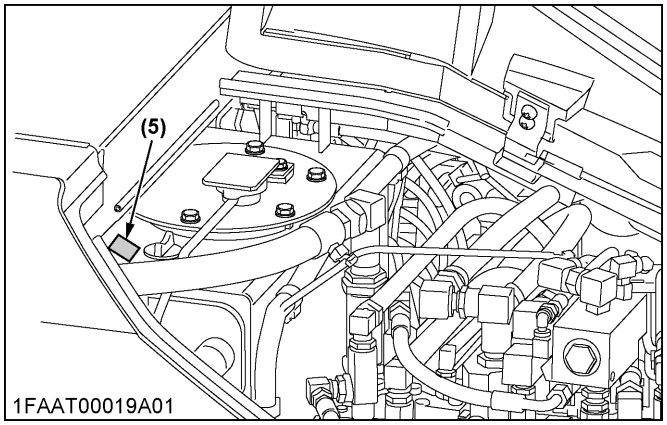

(1) Part No. RD579-5725-1
Do not touch hot parts such as the exhaust muffler.

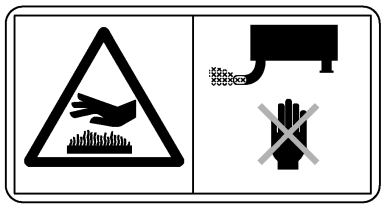

(3) Part No. RD579-5745-1
Do not touch hot parts such as the exhaust muffler.

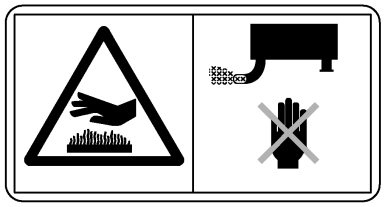

(4) Part No. RD838-5729-1



(2) Part No. RD859-5778-1
Keep away from fan and fan belt.

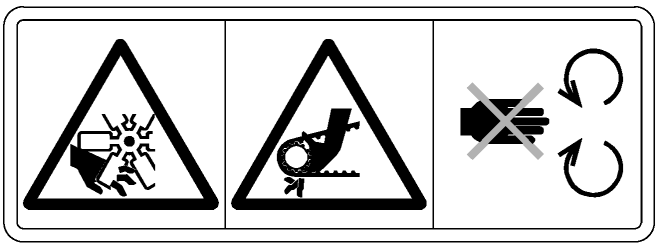

(5) Part No. RD579-5754-1
Stop engine and allow hydraulic tank to cool before opening cap.



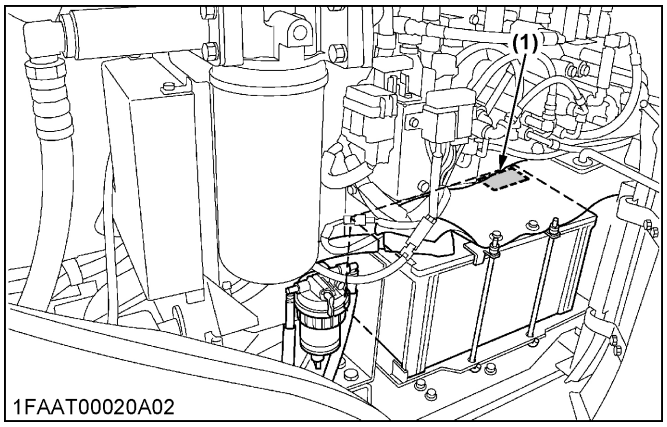

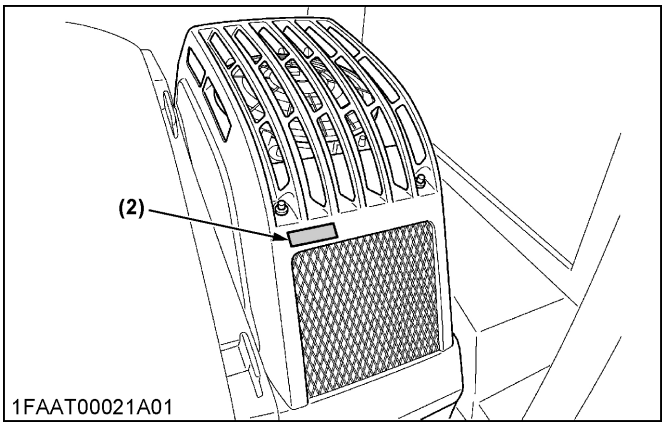

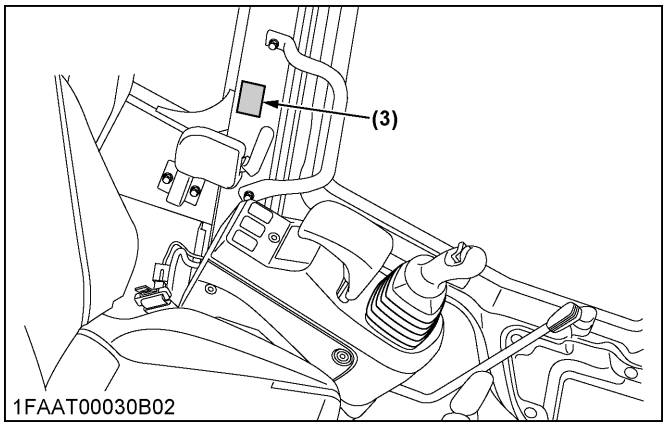

(1) Part No. 6C040-5559-1

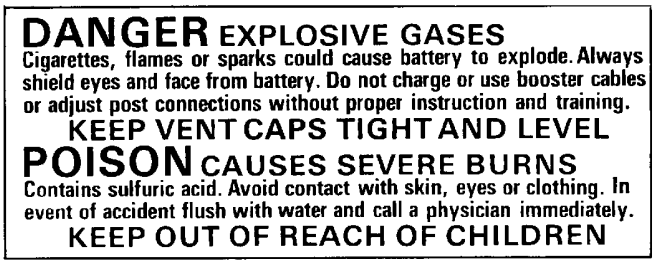

(2) Part No. RD858-5765-1



(3) Part No. RD579-5793-1
Do not forget to lock the front window.

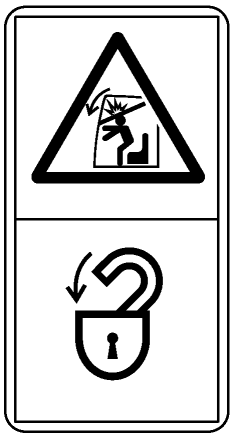

⚠ SAFE OPERATION

1. Care of safety labels

- Keep safety labels clean and free from obstructing material.
- Clean safety labels with soap and water, and dry with a soft cloth.
- Replace damaged or missing safety labels with new labels from your Kubota dealer.
- If a component with safety label(s) affixed is replaced with new part, make sure new label(s) is (are) attached in the same location(s) as the replaced component.
- Mount new safety labels by applying on a clean dry surface and pressing any bubbles to outside edge.

DEALER SERVICE

Your Kubota dealer is always ready to help so that your machine offers the best performance. After having carefully read these instructions, you will realize that much of the routine maintenance can be done by yourself. For service, contact the Kubota dealer shop from which you purchased your product, or your local Kubota dealer. When ordering parts from your Kubota dealer, always provide the product identification number of the machine and the serial number of the engine.
Note these numbers right away in the space provided.

Machine product identification number	
Dealer's name (To be filled in by the owner)	
Date of purchase	

	Model	Serial number
Engine		

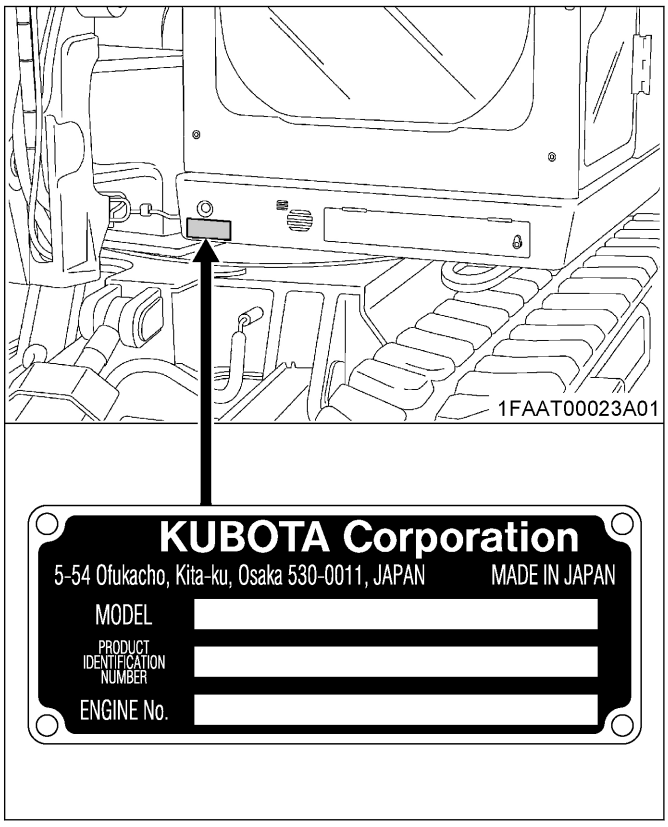

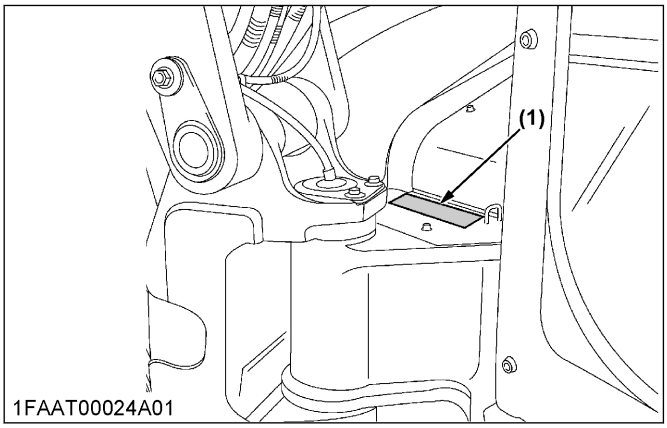

(1) Product identification number

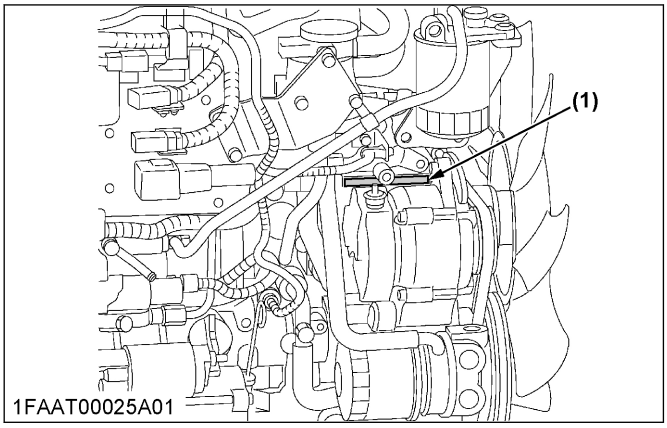

(1) Engine serial number

WARRANTY POLICY

This product is warranted under the **Kubota Limited Express Warranty**, a copy of which may be obtained from your selling dealer. No warranty shall, however, apply if the product has not been serviced and maintained according to the instructions given in the operator's manual, even if it is within the warranty period.
The product (s) described in this operator's manual are designed and manufactured only for the country in which they are initially wholesaled by Kubota or one of its affiliated companies. Neither Kubota Corporation nor its affiliated companies provide warranty for any product which is resold or retailed in any country other than the country for which the product (s) were designed or manufactured.

SCRAPPING THE PRODUCT AND ITS PROCEDURE

To put the product out of service, follow the local rules and regulations of the country or territory where you reside. If you have questions, contact your local Kubota dealer.

TECHNICAL DATA

				KUBOTA EXCAVATOR	
Model name				**KX080-5**	
Type				Cabin	
				Rubber tracks	Steel tracks
Operating weight (including operator's weight)			kg	8500	8560
Engine	Type			Water cooled 4 cycle diesel engine with 4 cylinder	
	Model name			KUBOTA **V3307-CR-TE5-BH-1**	
	Total displacement		cc	3331	
	Engine power	SAE J1995 gross	kW (HP)	49.7 (66.6)	
		SAE J1349 net	kW (HP)	46.5 (62.3)	
	Rated speed		rpm	2000	
	Low idling speed		rpm	1100	
Performance	Swivel speed		rpm	9.8	
	Travel speed	Fast	km/h	4.8	
		Slow	km/h	2.7	
	Ground pressure (with operator75 kg)		kPa (kgf/cm^2)	36.9 (0.376)	37.2 (0.379)
	Climbing angle		% (deg)	58 (30)*1*2*3*4	
Dozer	Width×height		mm	2200×500	
Boom swing angle		Left	rad (deg)	1.17 (67)	
		Right	rad (deg)	1.05 (60)	
Pressure connection for attachments	Maximum displacement (theoretical)		L/min	100 (AUX 1 port) 55.8 (AUX 2 port)	
	Maximum pressure		MPa (kgf/cm^2)	20.6 (210) (AUX 1 port) 20.6 (210) (AUX 2 port)	
Fuel tank capacity			L	115	

*1 With unloaded digging bucket.

*2 Firm compacted soil.

*3 Operators must exercise extra caution and follow instructions in the operator's manual.

*4 Worse condition or heavier attachment to the above will decrease climbing angle.

NOTE :

- **Above weights are based on the machine with Kubota original bucket and 2100 arm.**
- **The performances are based on the machine with rubber track.**
- **Specifications are subject to change without notice.**
- **ROPS and OPG (Top Guard Level I) structure complies with ISO 12117-2 and ISO 10262.**

EXCAVATOR PARTS

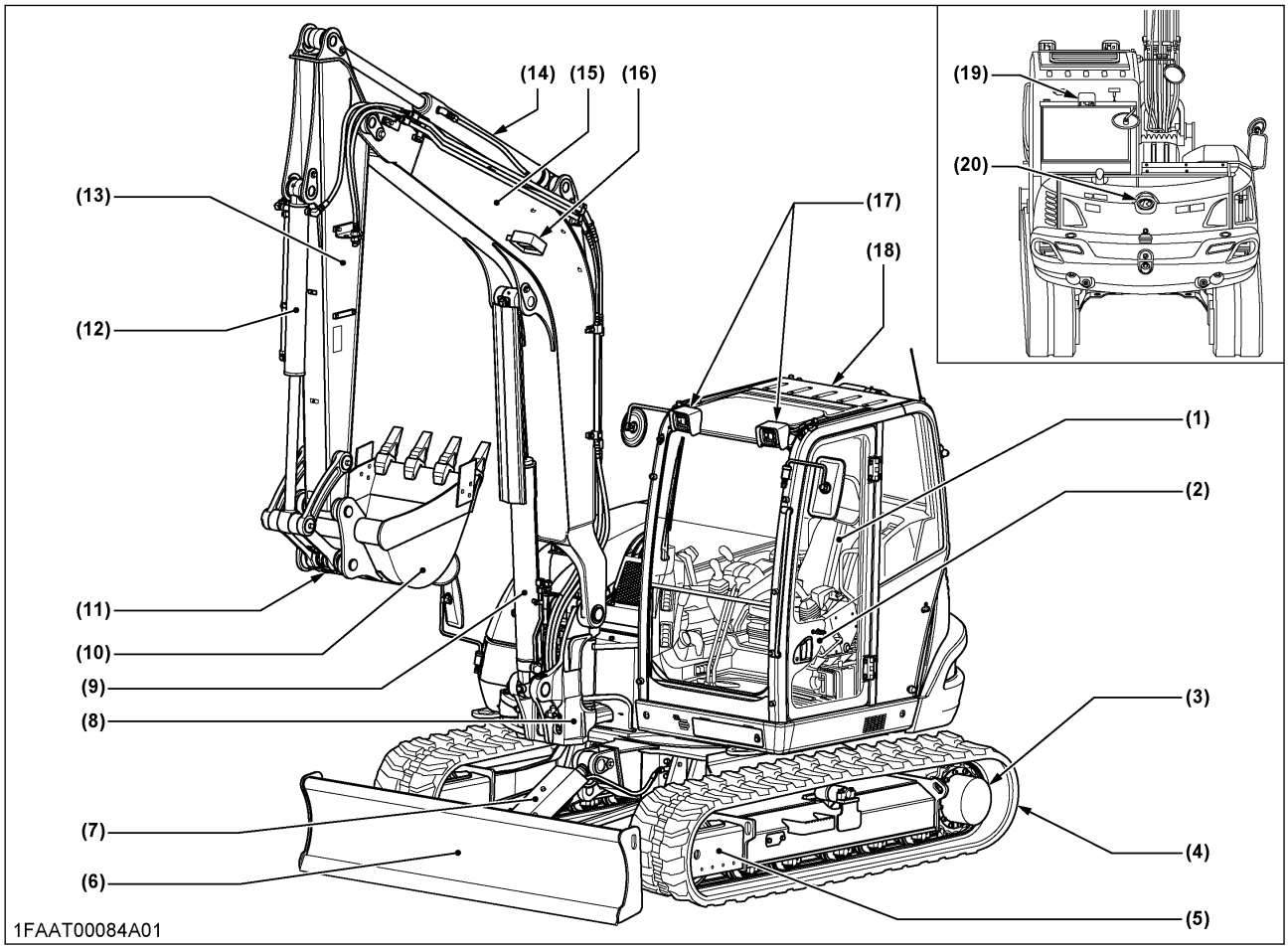

(1) Operator's seat
(2) Cab door
(3) Drive sprocket
(4) Track
(5) Front idler
(6) Dozer blade
(7) Dozer cylinder
(8) Swing bracket
(9) Boom cylinder
(10) Bucket
(11) Bucket link 1 / Bucket link 2 and 3
(12) Bucket cylinder
(13) Arm
(14) Arm cylinder
(15) Boom
(16) Working light (boom)
(17) Working light (cabin)
(18) Cabin
(19) Rear light
(20) Rear view camera

INSTRUMENT PANEL AND CONTROLS

INSTRUMENT PANEL AND SWITCHES

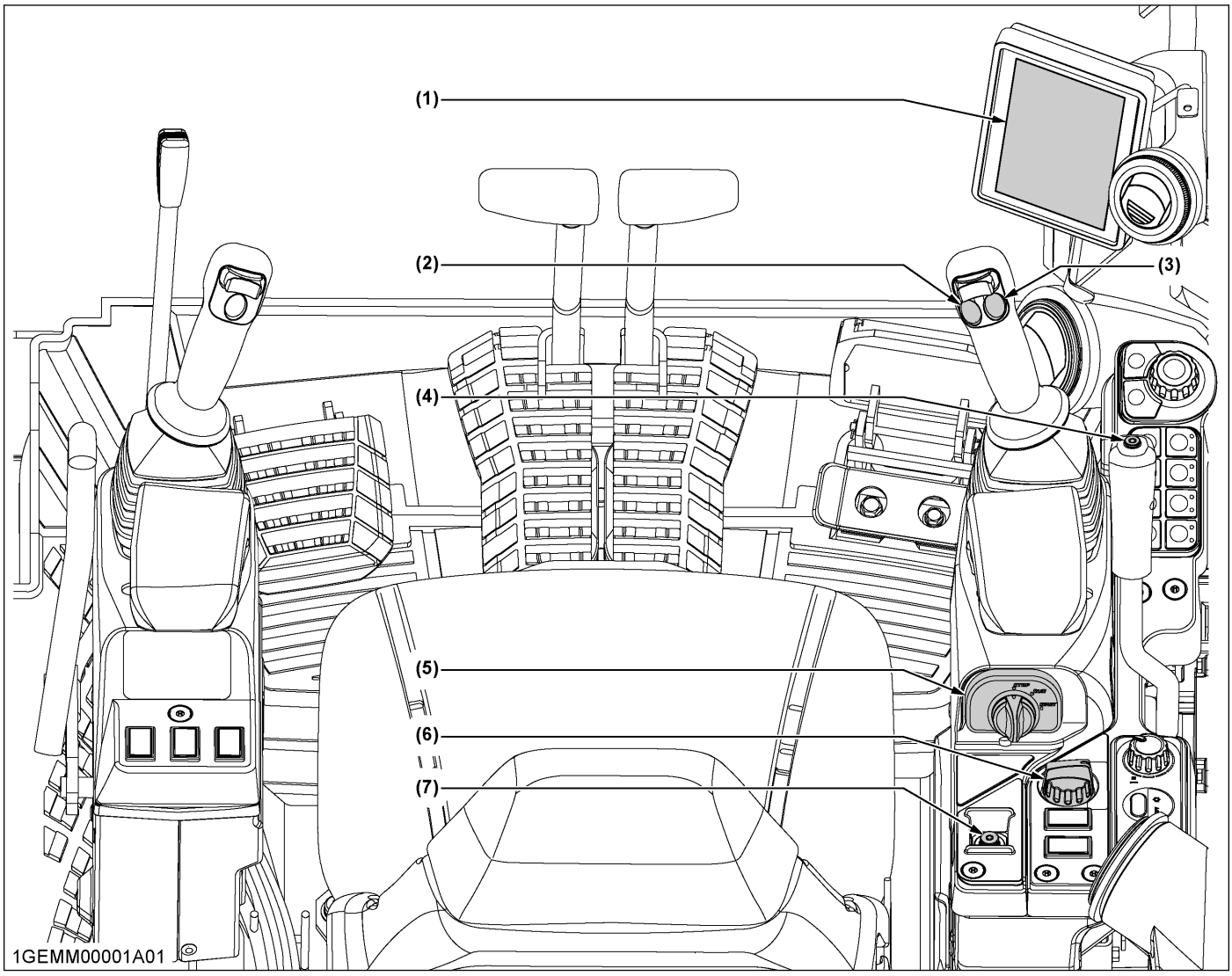

(1) Display 32
(2) Horn switch 47
(3) Aux port enable switch 48
(4) Travel speed switch 49
(5) Starter switch 32
(6) Throttle potentiometer 49
(7) Inhibit Diesel Particulate Filter (DPF) regeneration switch (inhibit switch) 50

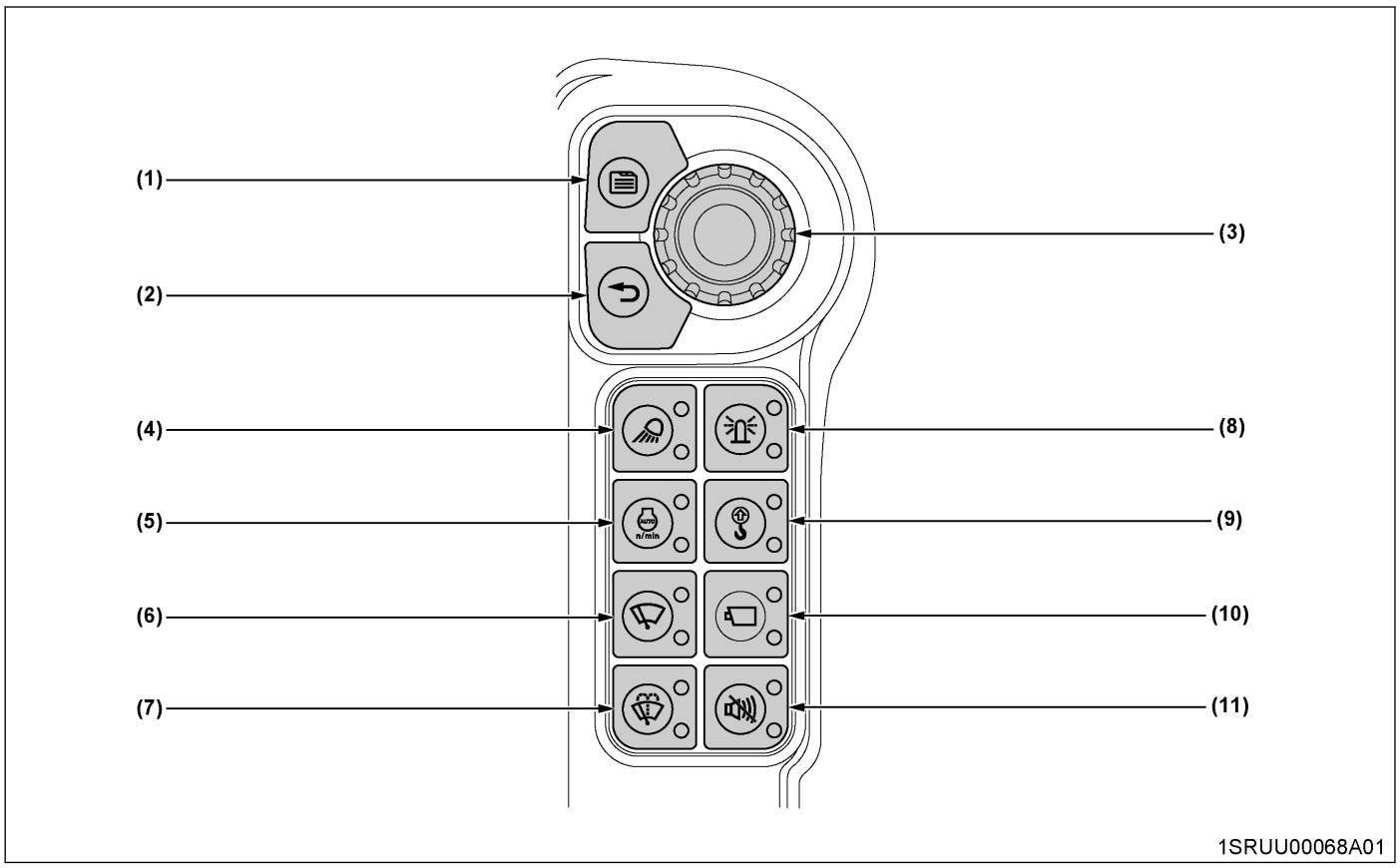

(1) Menu switch
(2) Return switch
(3) Jog dial
(4) Light switch
(5) Auto idle control switch
(6) Wiper switch
(7) Washer switch
(8) Beacon light switch (option)
(9) —
(10) Camera switch
(11) Travel alarm cancel switch

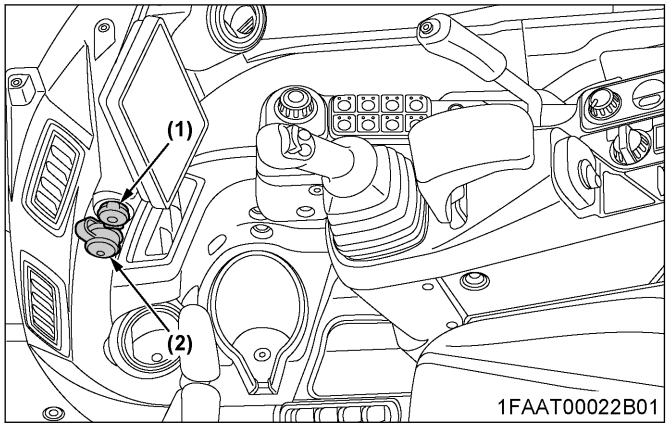

(1) 12 V electrical outlet
(2) USB (Type-A) outlet

Home screen

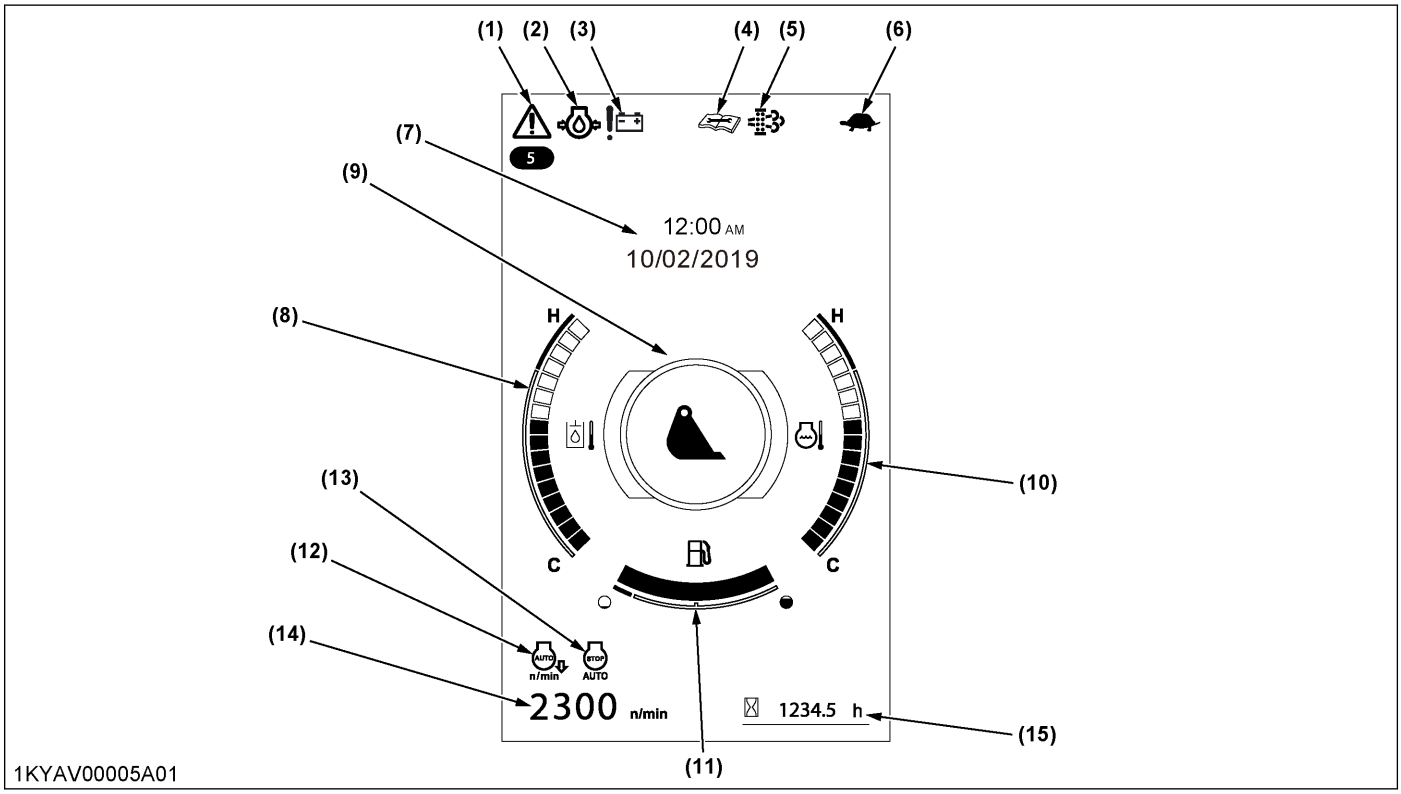

(1) Warning lamp
(2) Engine oil pressure warning lamp
(3) Battery charging warning lamp
(4) Periodic notification lamp
(5) DPF regeneration lamp
(6) Travel speed lamp
(7) Time and date
(8) Hydraulic oil temperature gauge
(9) AUX mode
(10) Coolant temperature gauge
(11) Fuel gauge
(12) AI lamp
(13) Engine auto-stop lamp
(14) Engine speed
(15) Hour meter

HANDLING THE INSTRUMENT PANEL AND SWITCHES

1. Starter switch

[STOP]

- The engine is stopped and the electrical parts cannot be used.

[RUN]

- Turn the starter switch one click from the **[STOP]** position to the **[RUN]** position. All the circuitry gets energized to start preheating. The message "`Preheating`" appears on-screen.
  When checking for any lamp breakage, keep in mind that the lamp lights up and stays on for about 1 second.
- When the "`Enter password`" screen appears on the display, enter the 4-digit user password using the keypad.
  (For details on entering user passwords, see STARTING THE ENGINE on page 60.)

[START]

- Move the pilot control lock lever to the LOCK position. Turn the starter switch one more click from the **[RUN]** position to the **[START]** position. The starter motor is then activated to start the engine.
  When you let go of the starter switch, the starter switch returns to the **[RUN]** position. Therefore, once the engine has started, let go of the starter switch.

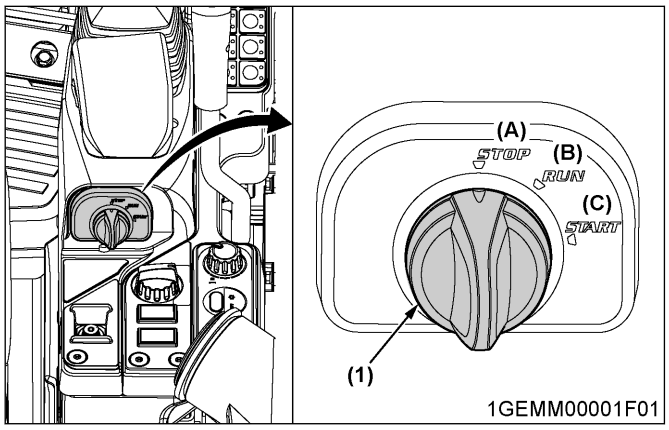

(1) Starter switch
(A) STOP
(B) RUN
(C) START

NOTE :

- **Even when the machine is off, press the jog dial, and the display shows the hour meter, fuel gauge, water temperature gauge, hydraulic oil temperature gauge, and clock for 10 seconds.**

2. Display for normal operation

IMPORTANT :

- **When cleaning the display screen, wipe with a soft cloth like those used for cleaning eyeglasses.**
- **Using a coarse cloth or rubbing too hard may damage the surface.**
- **Cleaning the display screen with alkaline, acidic, or organic solvents such as alcohol or benzene can damage the screen.**

2.1 Fuel gauge

⚠ WARNING

To avoid personal injury or death:

- **Stop the engine before adding fuel.**
- **Keep open flames away from the machine, or it may cause a fire.**
- **Tighten the fuel cap after refueling.**

With the starter switch at the **[RUN]** position, the fuel remaining in the fuel tank is indicated.

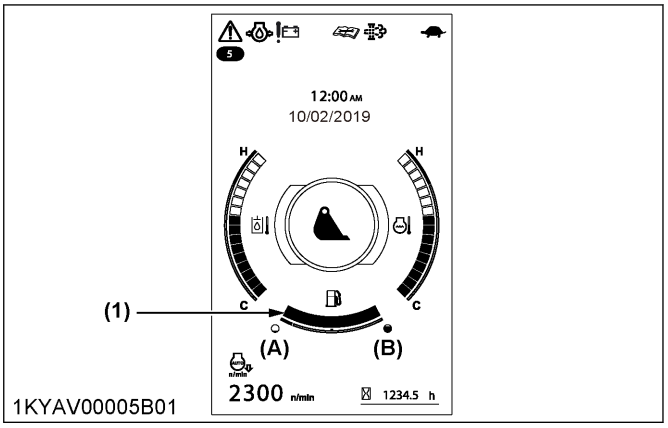

(1) Fuel gauge
(A) EMPTY
(B) FULL

If the fuel runs short, open the cap and refuel the tank.

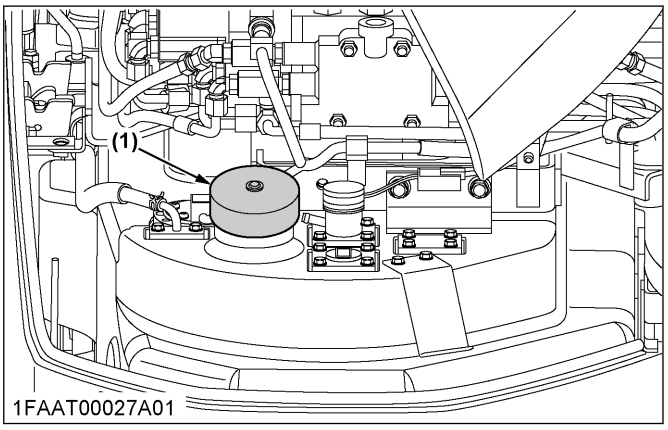

(1) Fuel cap

IMPORTANT :

- **If the fuel gauge indicator is near the *"Empty"*, or if the "`Feed fuel`" message appears, add fuel as soon as possible. If the indicator is near *"Empty"* and the machine is operated on a slope, the engine may run out of fuel.**
- **Users must take appropriate actions to insure fuel is not contaminated during the refueling operation.**

2.2 Fuel level audible indication function (when refueling)

The fueling progress can be monitored by a buzzer sound.

1. With the starter switch at the **[STOP]** position, press the jog dial.

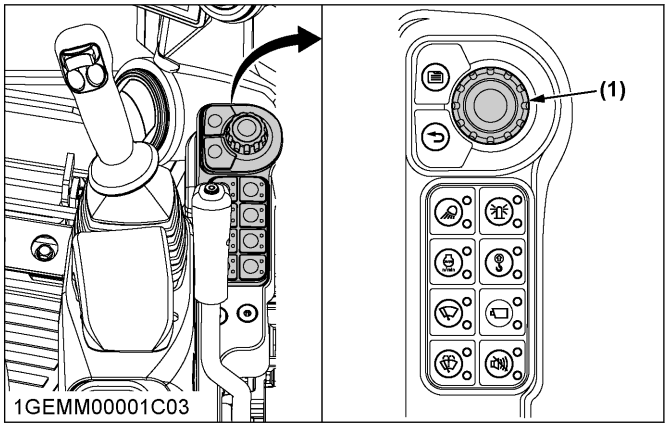

(1) Jog dial

2. Start refueling the machine. The buzzer beeping intervals change according to how much fuel is poured into the tank. As the fuel tank is filled up, the buzzer sound becomes almost continuous.

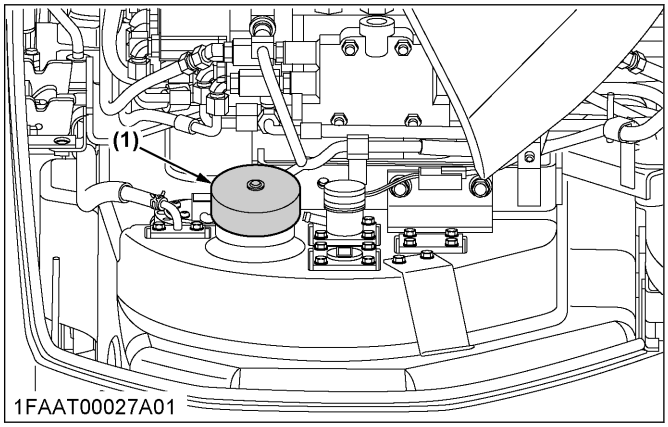

(1) Fuel cap

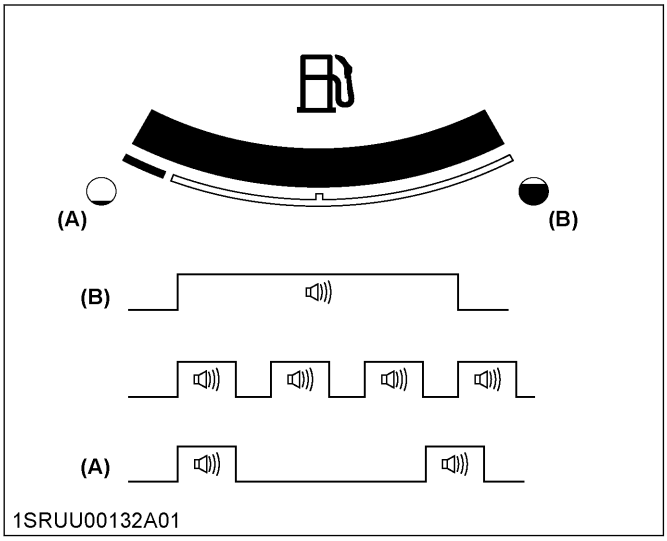

(A) EMPTY
(B) FULL

3. While refueling the machine, listen to the buzzer to know how much the fuel tank is filled.

   NOTE :
   - **If fuel is poured too slowly, the buzzer will stop beeping. When resumed normally, the buzzer will start beeping.**

4. To stop refueling halfway (before the tank is full), press the jog dial or simply stop refueling for a while. The buzzer will stop sounding.

2.3 Coolant temperature gauge

⚠ WARNING

To avoid personal injury or death:

- **Do not open the radiator cap during or just after operation. Hot coolant may gush out and scald you. Wait for the coolant to cool down before opening the cap.**

The coolant temperature is indicated when the starter switch is at the **[RUN]** position.

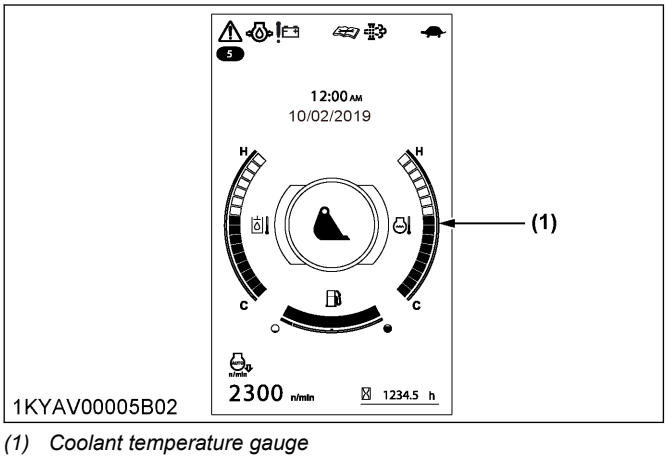

(1) Coolant temperature gauge

If the coolant temperature indicator is near **[H]**, take the following steps. Depending on the coolant temperature, the warning message "Water temp. is rising" or "Overheat forced idling" appears. In either case, follow the same procedure:

1. Stop the job.
2. Reduce engine's rpm to idle and keep it at idle for 5 minutes.
3. Stop the engine and check the following points:
   a. Low coolant level or leakage
   b. Fan belt tension
   c. Mud or dust deposits on radiator
   d. Hydraulic oil leakage

2.4 Overheat warning

- If the coolant temperature becomes too high, the message "Water temp. is rising" appears on-screen for a certain period of time.

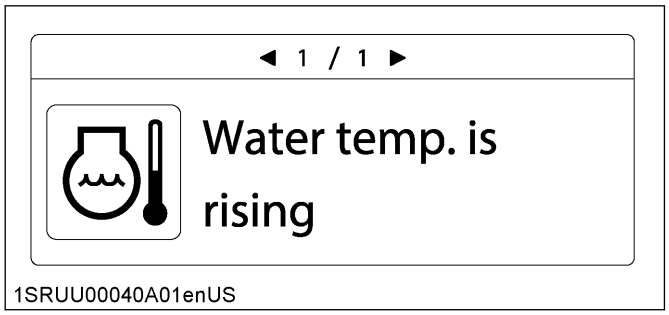

1SRUU00040A01enUS

IMPORTANT :

- **If this message is displayed, interrupt the work and lower the engine rpm. This will reduce the coolant temperature.**

- The overheat warning appears on-screen. Also, the following message shows up on the display and the engine automatically starts idling. Acceleration is not operative.

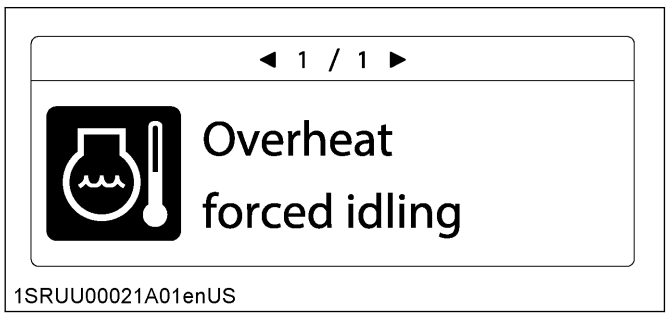

1SRUU00021A01enUS

If this message appears, take corrective measures. (See Overheating countermeasures on page 64.)

NOTE :

- **Acceleration can be automatically enabled when the coolant temperature has dropped.**

2.5 Hydraulic oil temperature gauge

The hydraulic oil temperature is indicated when the starter switch is in the **[RUN]** position.

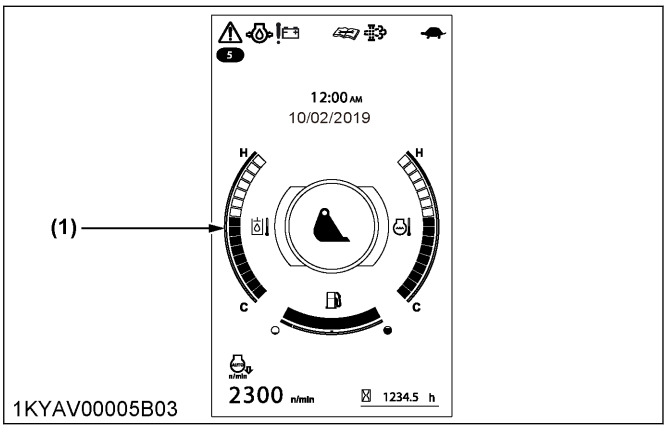

1KYAV00005B03

(1) Hydraulic oil temperature gauge

If the hydraulic oil temperature indicator is near "H", take the following steps. Depending on the hydraulic oil temperature, the warning message "Hyd. oil temp. is rising" or "Overheat forced idling" appears. In either case, follow the same procedure:

1. Stop the job.
2. Reduce engine rpm's to idle and keep it at idle for 5 minutes.
3. Stop the engine and check the following points.
   a. Low hydraulic oil level or leakage
   b. Fan belt tension
   c. Mud or dust deposits on the oil cooler
   d. Coolant leakage

2.6 Hydraulic oil overheat warning

If the hydraulic oil temperature becomes too high, the message "Hyd. oil temp. is rising" appears on-screen for certain period of time.

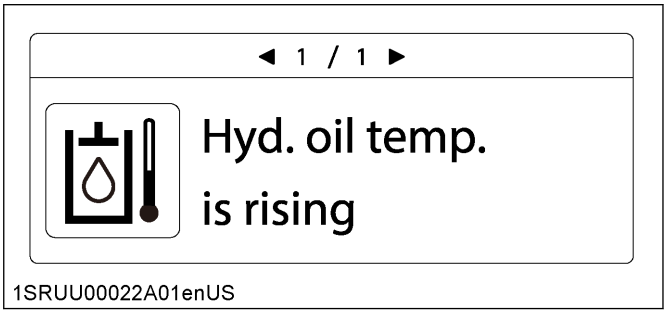

1SRUU00022A01enUS

IMPORTANT :

- **If this message is displayed, interrupt the work and lower the engine rpm. This will reduce the hydraulic oil temperature.**
- **The overheat warning appears on-screen. Also, the following message shows up on the display and the engine automatically starts idling. Acceleration is not operative.**

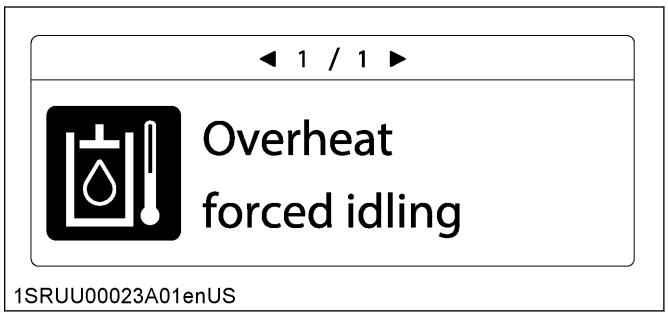

2.7 Temperature drop indication of hydraulic oil

If the hydraulic oil temperature is too low at a start of the engine, the following message appears.

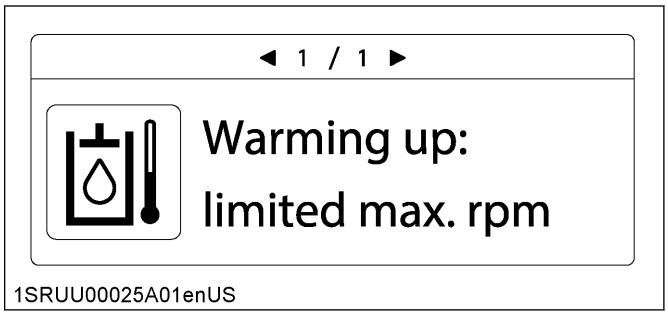

If this message appears, warm up the engine at lower than the medium speed.
(For warming-up instructions, see CHECK POINTS AFTER STARTING THE ENGINE on page 63.)
While this message is displayed, the engine rpm can only turn at up to the medium speed until the hydraulic oil temperature rises to an appropriate level.
When the hydraulic oil temperature has risen to the appropriate level, the engine rpm may be raised to maximum level accordingly by turning the throttle potentiometer.

2.8 Hour meter

The hour meter indicates the total operating hours of the machine.
How it works:

- The meter advances 1 hour after an hour of operation regardless of the engine rpm.

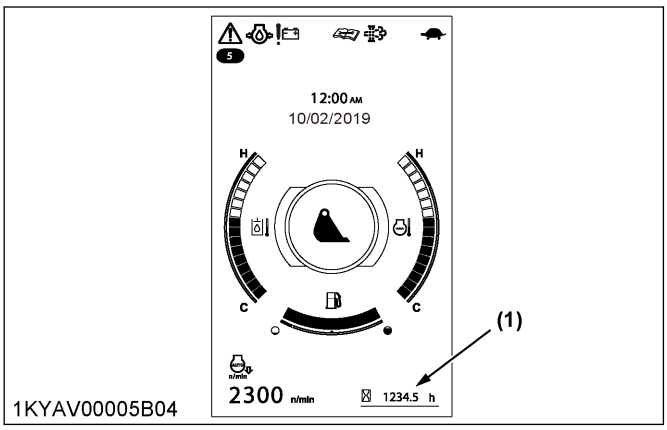

(1) Hour meter

2.9 Engine tachometer

The engine tachometer indicates the current rpm of the engine.

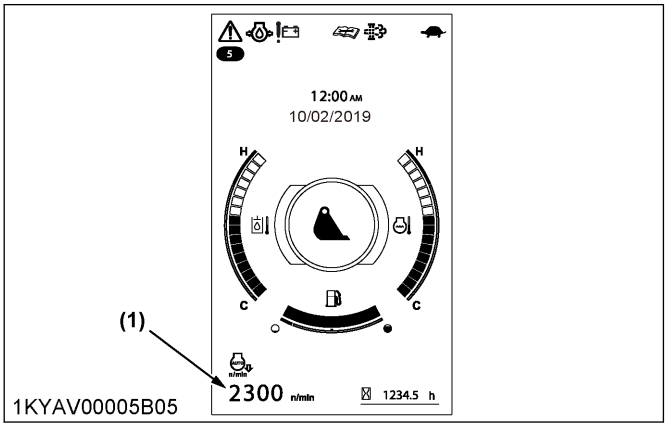

(1) Engine tachometer

2.10 Glow indication

The message "Preheating" appears on-screen when the starter switch is turned to the **[RUN]** position but the engine requires preheating. Wait until the message disappears, and then start the engine.

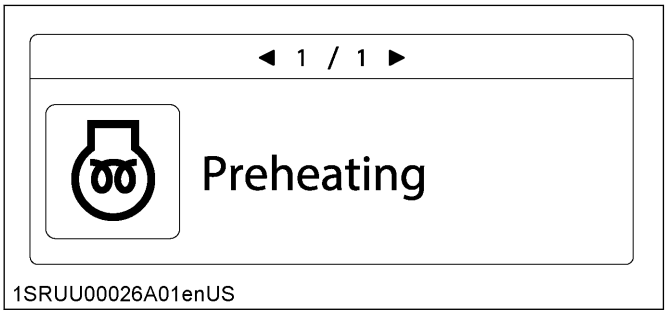

2.11 Periodic Check

The following message appears on the display 10 hours before a periodic check.

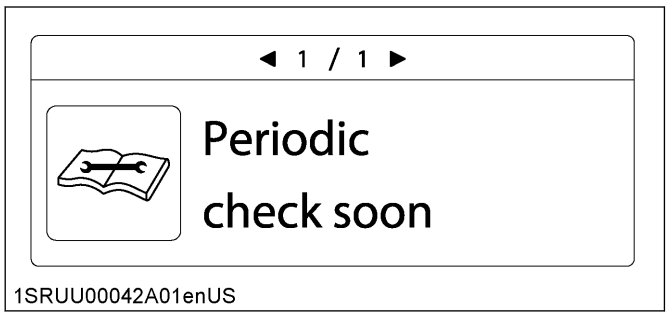

1SRUU00042A01enUS

1. Press the menu switch to make the menu bar appear on-screen.
2. Rotate the jog dial to the left to select "`Periodic check`", and press the jog dial to check the list of periodic check items.

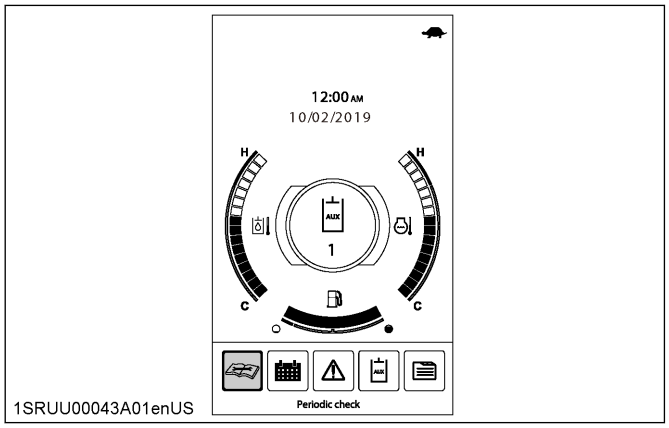

1SRUU00043A01enUS

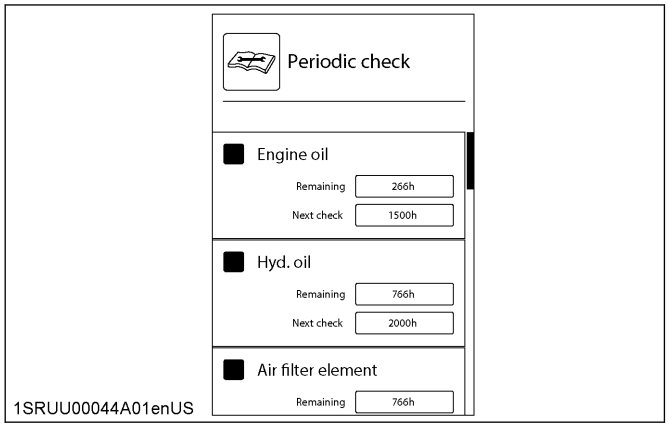

1SRUU00044A01enUS

3. Perform the servicing as listed.

NOTE :

- **When the periodic check interval has passed, the message "`Periodic check notification`" shows up. Immediately perform the specified servicing.**
- **When the servicing has been completed, turn the starter switch on and off 10 times or more and the check screen automatically disappears.**
- **The periodic check screen can also be preset to only be made to disappear manually.**

For this setting, contact your local Kubota dealer.

2.11.1 Service hour meter

When the hour meter reaches the hours circled in the following maintenance table, a message appears.

No.	Check points		Measures	Hour meter indicator								Intervals
				50	100	250	500	750	1000	1500	2000	
1	Engine oil		Change	◎		○	○	○	○	○	○	Every 250 hrs or every 6 months
2	Fuel filter		Replace				○		○	○	○	Every 500 hrs or every 1 year
3	Engine oil filter			◎		○	○	○	○	○	○	Every 250 hrs or every 6 months
4	Travel motor gear oil		Change	◎			○		○	○	○	Every 500 hrs
5	Hydraulic return filter element		Replace			○		○				Every 500 hrs (initial: 250 hrs)
6	Hydraulic oil		Change						○		○	Every 1000 hrs
7	Air filter element	Outer element	Replace						○		○	Every 1000 hrs
		Inner element							○		○	Every 1000 hrs
8	Hydraulic suction filter element								○		○	Every 1000 hrs
9	Hydraulic pilot filter element								○		○	Every 1000 hrs
10	Oil separator element									○		Every 1500 hrs
11	Front idler and track roller oil		Change								○	Every 2000 hrs

◎ Represents the interval for the first servicing only.

2.12 Log record

The log record helps you check the last 3 months operating record of the machine. Take the following steps:

1. Turn the starter switch to the **[RUN]** position.

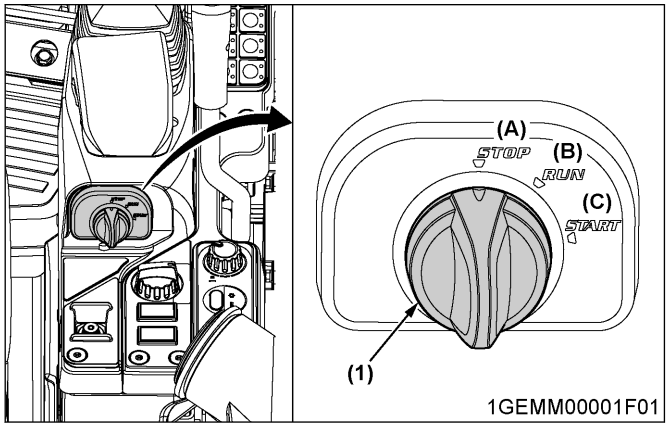

(1) Starter switch

(A) STOP
(B) RUN
(C) START

2. Press the menu switch to make the menu appear on-screen.
3. Rotate the jog dial to the left to select "Log record", and press the jog dial to make the log record (the machine's operating day and operating hours) for the current month appear.

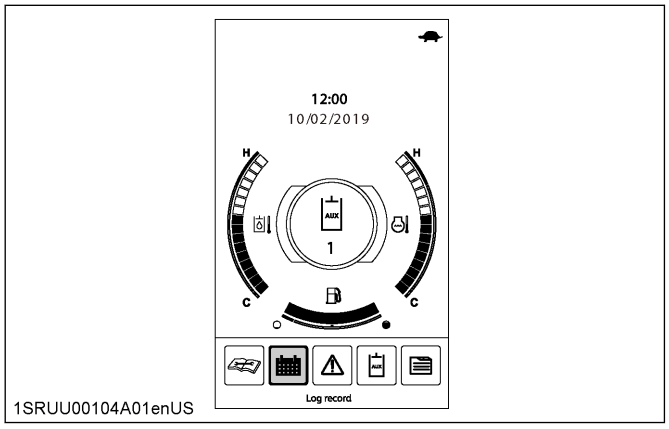

4. To view records from previous months, press the jog dial again, rotate the jog dial to select the desired month, and press the jog dial to confirm the selection.

NOTE :

- **It is possible to view records from the last three months (up to 90 days ago).**

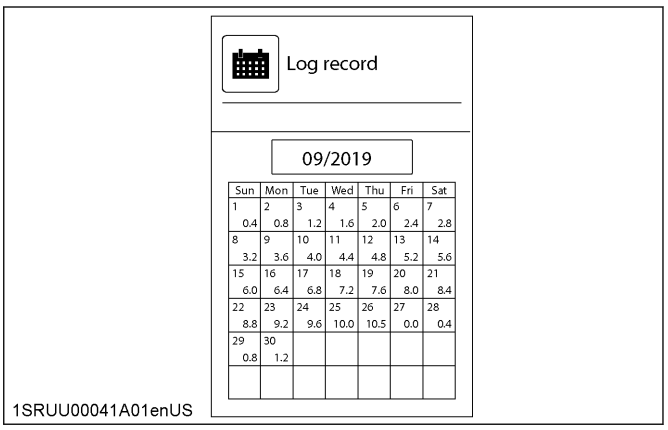

2.13 AUX settings

Details regarding AUX settings can be found in a different section.
(See AUXILIARY PORT OPERATION on page 74.)

2.14 User settings

NOTE :

- **If you have any questions, contact your local Kubota dealer.**

2.14.1 Setting the language

1. Turn the starter switch to the **[RUN]** position.

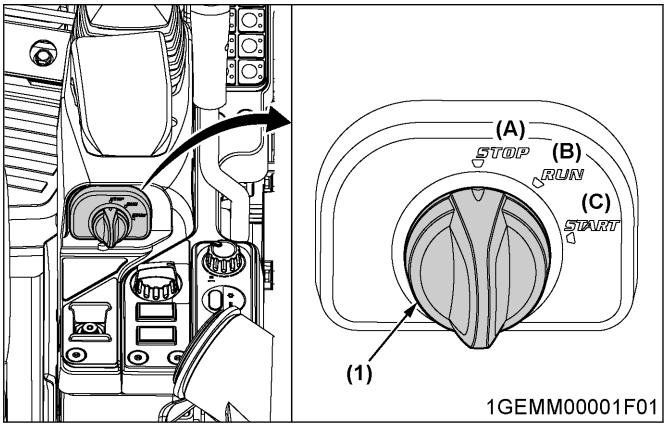

(1) Starter switch

(A) STOP
(B) RUN
(C) START

2. Press the menu switch to make the menu bar appear on the display.

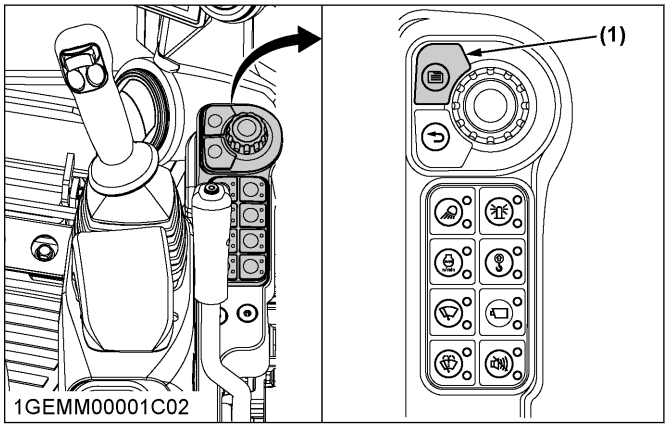

(1) Menu switch

3. Rotate the jog dial to the right to select "Various settings", and press the jog dial.

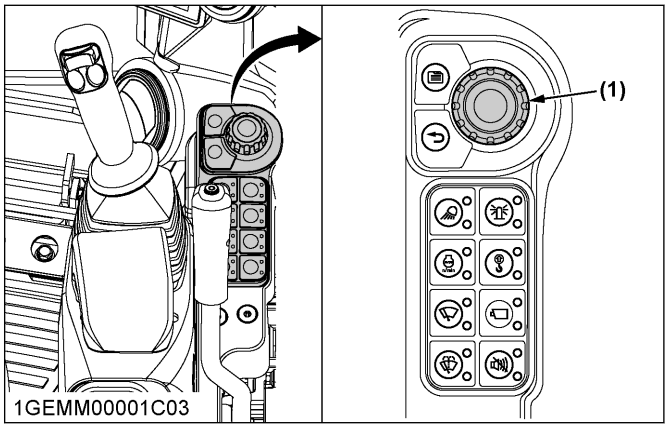

(1) Jog dial

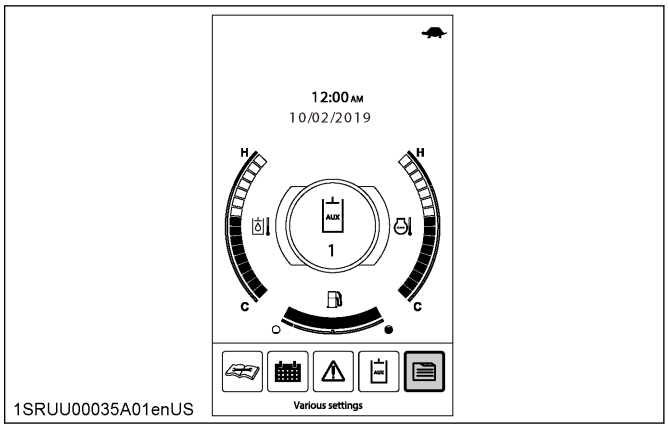

4. Rotate the jog dial to select "Languages", and press the jog dial.

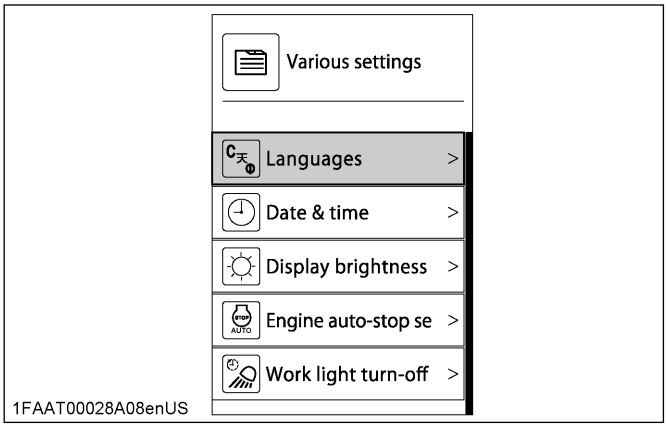

5. Rotate the jog dial to select the desired language, and press the jog dial to confirm.

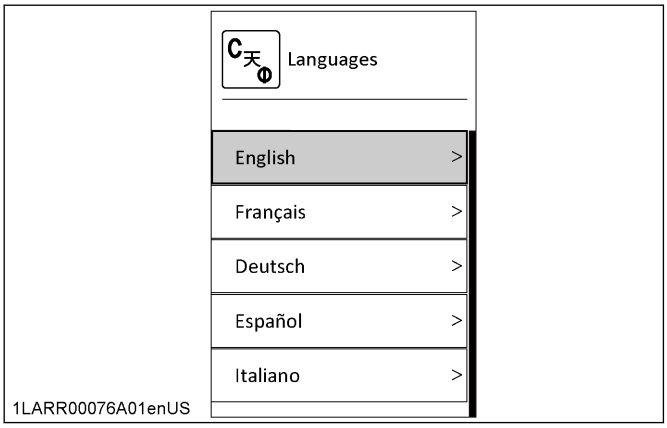

NOTE :

- **If "12345" is selected as the language, code numbers are displayed on the screen instead of text.**

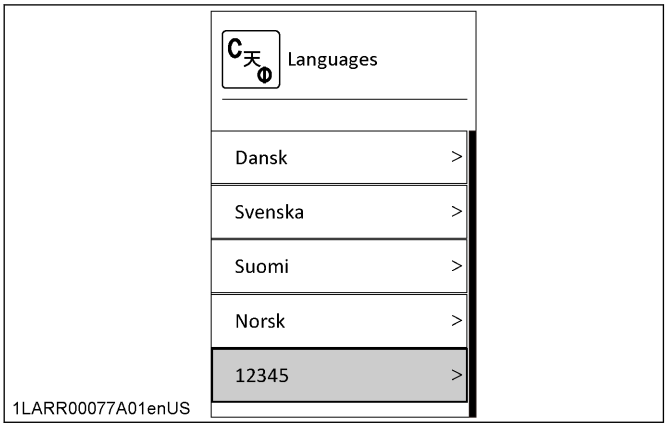

2.14.2 Setting the clock

1. Turn the starter switch to the **[RUN]** position.
2. Press the menu switch to make the menu bar appear.
3. Rotate the jog dial to the right to select "Various settings", and press the jog dial.

4. Rotate the jog dial to the right to select "Date & time", and press the jog dial.

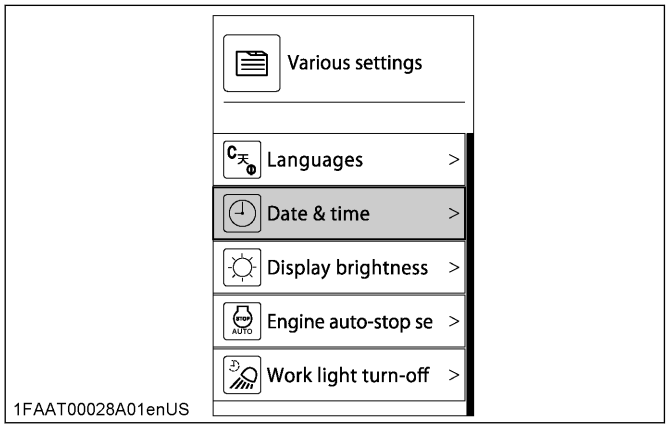

5. Rotate the jog dial to the right to select "Set date" or "Set time", and press the jog dial.

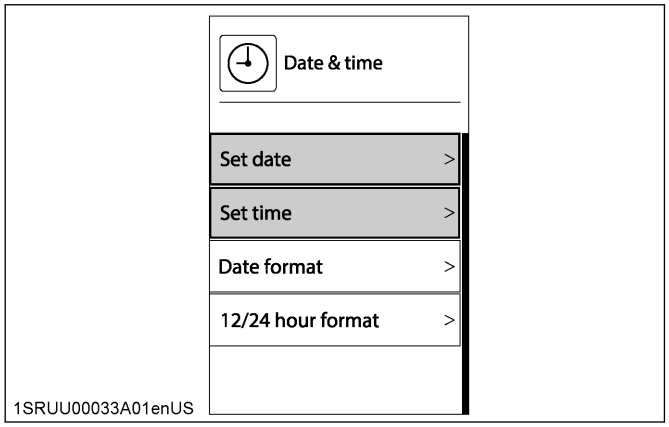

6. Adjust the numerical values as follows:
   a. Rotate the jog dial to the right or to the left to select the item you wish to change and press the jog dial.
   b. Rotate the jog dial to the right or to the left to increase or decrease the numerical value.
   c. Press the jog dial to confirm the value.

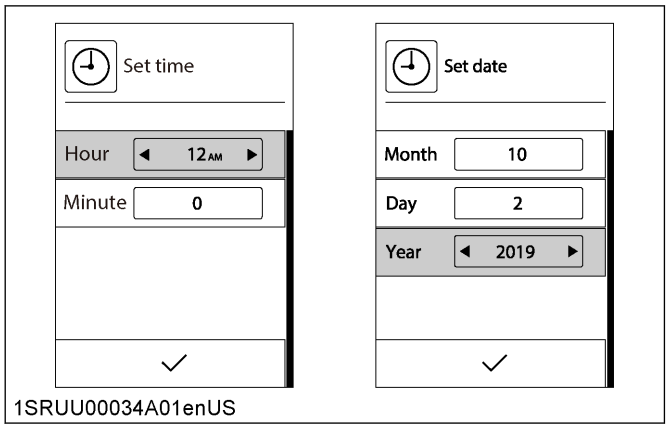

7. Rotate the jog dial to the right to select "✔" and press the jog dial to save the new settings.

NOTE :

- **Be careful not to accidentally press the jog dial when "✔" is selected on the clock setting screen. Otherwise, the seconds will be set to [00] and the clock will show the wrong time.**
- **If the clock is interrupted, for example when the battery is disconnected, the following message appears on-screen. Select "✔" to set the clock again.**

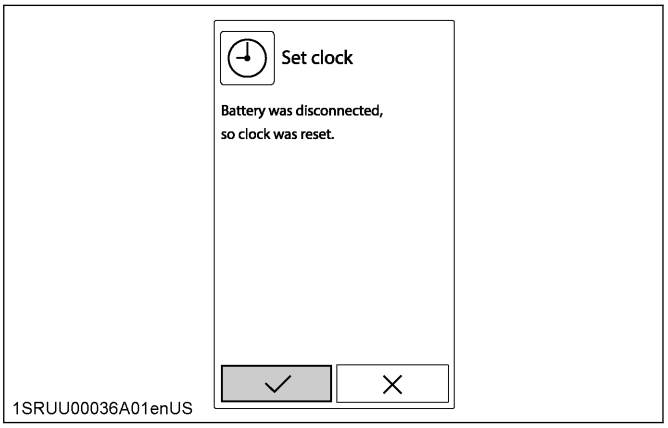

NOTE :

- **When the return switch is pressed on the clock setting screen, the clock is not readjusted and returns to the previous menu screen.**

2.14.3 Reordering year/month/day and selecting AM/PM or 24-hour

1. Turn the starter switch to the **[RUN]** position.
2. Press the menu switch to make the menu bar appear.
3. Rotate the jog dial to the right to select "Various settings", and press the jog dial.
4. Rotate the jog dial to the right to select "Date & time", and press the jog dial.

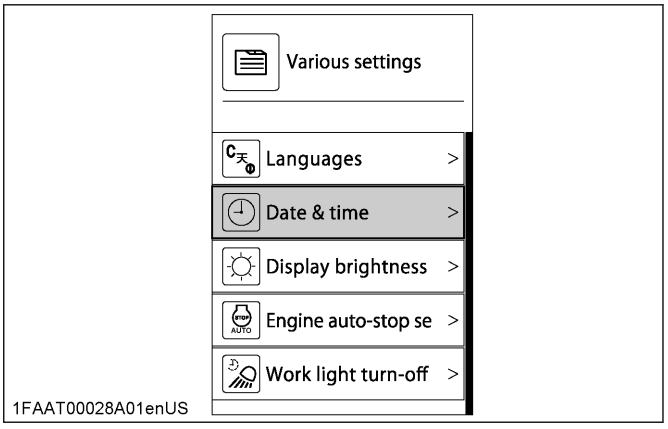

5. Rotate the jog dial to the right to select "Date format" or "12/24 hour format", and press the jog dial.

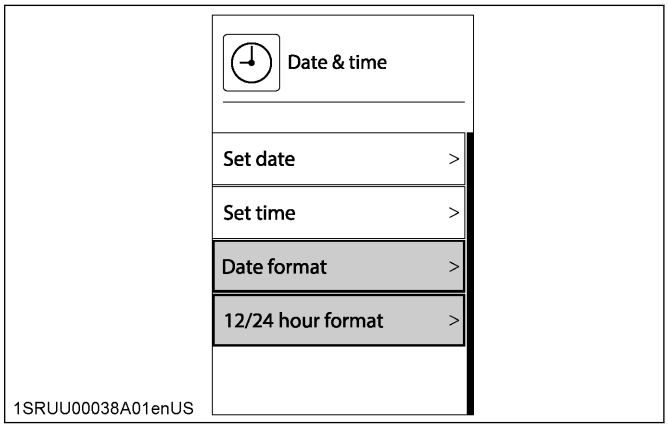

6. Press the jog dial, and one of the following screens appears.

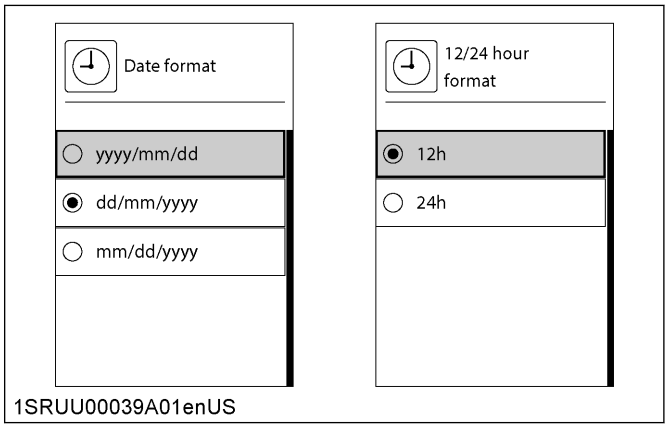

7. Rotate the jog dial to the right or to the left to move the cursor. Select the desired format.
8. Press the jog dial to save the new settings, or press the return switch to retain the previous settings.

2.14.4 Setting the display brightness

The display brightness can be set to one of 10 levels. It is possible to register separate brightness settings for when the working light is on and when the working light is off.

1. Turn the starter switch to the **[RUN]** position.
2. Press the menu switch to make the menu bar appear.
3. Rotate the jog dial to the right to select "Various settings", and press the jog dial.
4. Rotate the jog dial to the right to select "Display brightness", and press the jog dial.

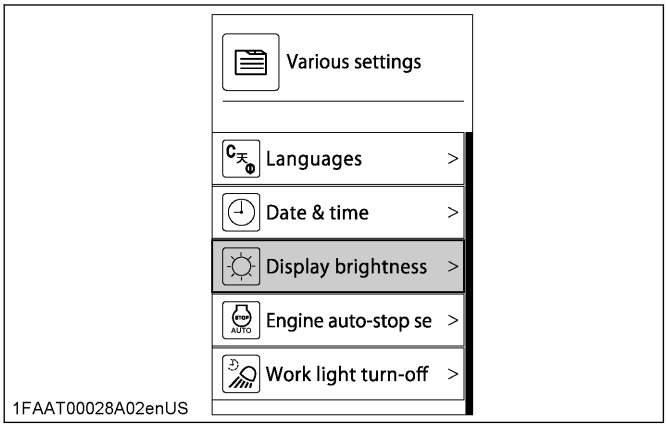

5. Rotate the jog dial to the right or left to select "Day" or "Night", and press the jog dial.

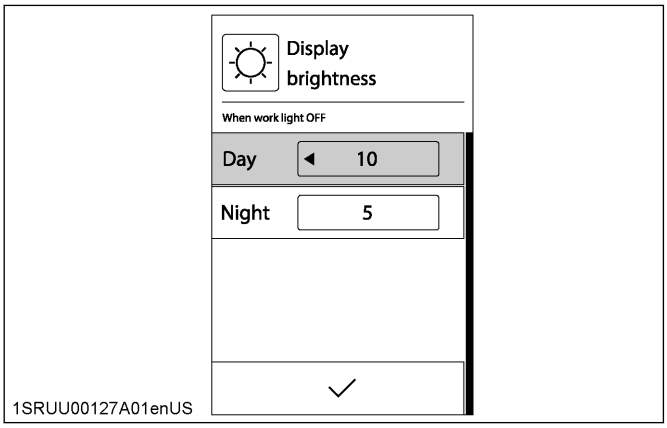

NOTE :

- **"Day" is the brightness setting for when the working light is off, and "Night" is the brightness setting for when the working light is on.**

Default settings	
Day	10
Night	5

6. Rotate the jog dial to the right or left to increase or decrease the numerical value, and press the jog dial to confirm the selection.
7. Rotate the jog dial to the right to select "✔" and press the jog dial to save the new settings, or press the return switch to retain the previous settings.

2.14.5 Setting the engine auto-stop function

It is possible to set the amount of idling time that passes before the engine auto-stop function activates.

1. Turn the starter switch to the **[RUN]** position.
2. Press the menu switch to make the menu bar appear on the display.

3. Rotate the jog dial to the right to select "Various settings", and press the jog dial.
4. Rotate the jog dial to the right to select "Engine auto-stop setting", and press the jog dial.

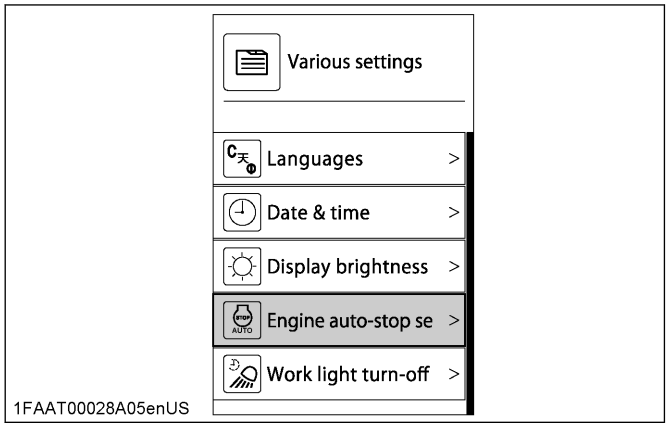

5. Rotate the jog dial to the right or left to select "ON"/ "OFF" or "Time", and press the jog dial.

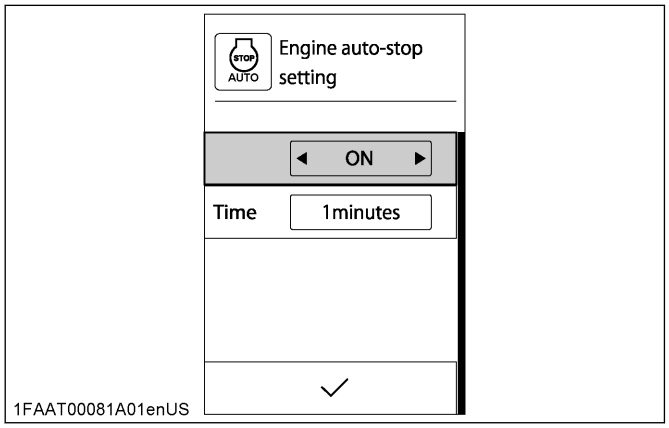

6. Rotate the jog dial to the right or left to select the desired setting, and press the jog dial to confirm the selection.

NOTE :
- **The engine auto-stop setting must be set to "ON" before the time can be set.**
- **The time can be set to 1, 3, 5, 10, 15, 20, 25 or 30 minutes.**

7. Rotate the jog dial to the right to select "✔" and press the jog dial to save the new settings, or press the return switch to retain the previous settings.

2.14.6 Setting the work light turn-off delay function

The working light turn-off can be delayed for a given time after turning off the starter switch. The working light switch can be used to manually turn off the working light when the turn-off delay function is activated.

1. Turn the starter switch to the **[RUN]** position.
2. Press the menu switch to make the menu bar appear.
3. Rotate the jog dial to the right to select "Various settings", and press the jog dial.
4. Rotate the jog dial to the right to select "Work light turn-off delay", and press the jog dial.

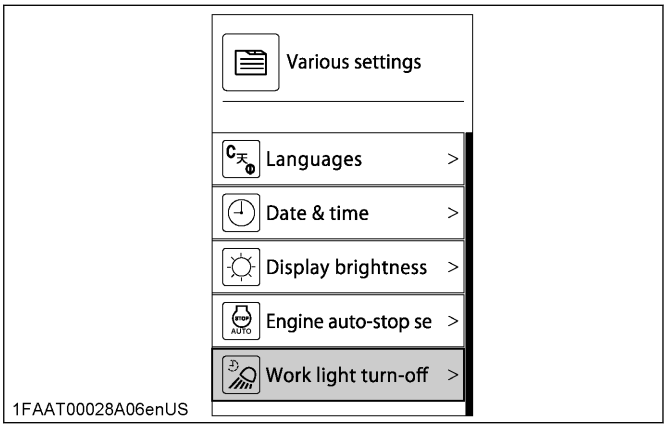

5. Rotate the jog dial to the right or left to select "ON/ OFF" or "Time", and press the jog dial.

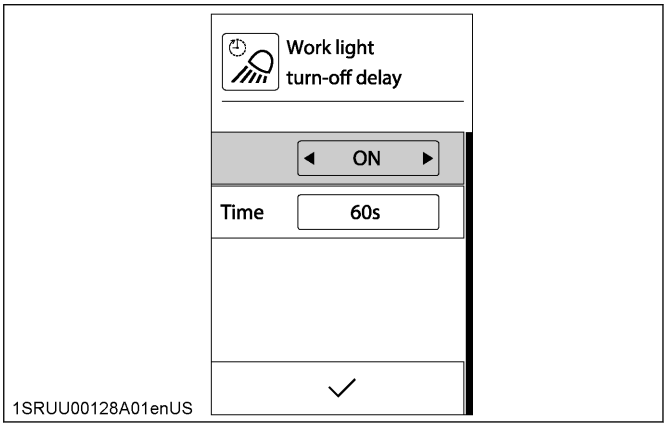

6. Rotate the jog dial to the right or left to select the desired setting, and press the jog dial to confirm the selection.

NOTE :
- **The work light turn-on delay must be set to "ON" before the delay time can be set.**
- **The delay time can be set in 30 second increments from 30 to 120 seconds.**

7. Rotate the jog dial to the right to select "✔" and press the jog dial to save the new settings, or press the return switch to retain the previous settings.

2.14.7 Registering new user passwords

1. Turn the starter switch to the **[RUN]** position.
2. Press the menu switch to make the menu bar appear on the display.
3. Rotate the jog dial to select "Various settings", and press the jog dial.

4. Rotate the jog dial to select "Password settings", and press the jog dial.

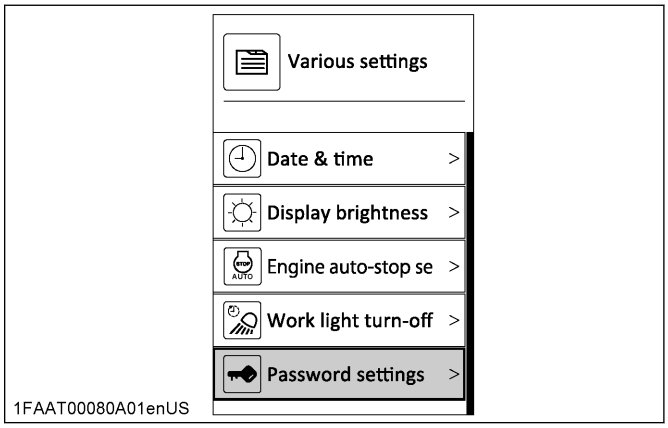

5. Enter the machine password.
   When the machine password has been verified, the "Password settings" screen appears.

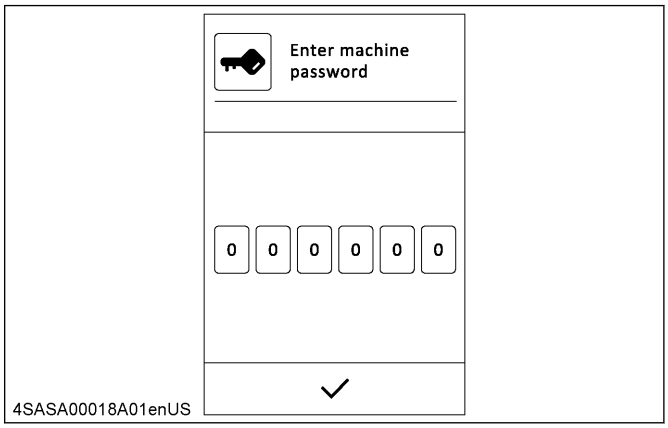

6. Rotate the jog dial to select "User password", and press the jog dial.

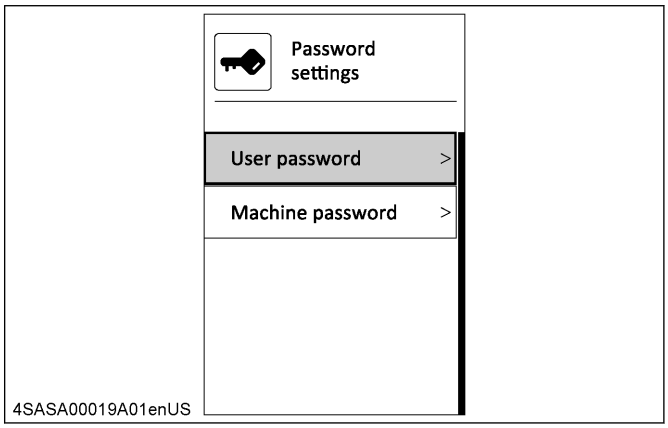

7. Rotate the jog dial to select one of the "Unregistered" password numbers, and press the jog dial.

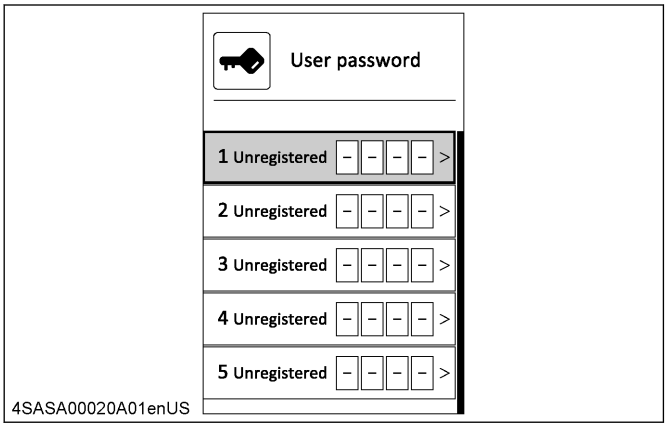

8. Enter the new user password of your choice.

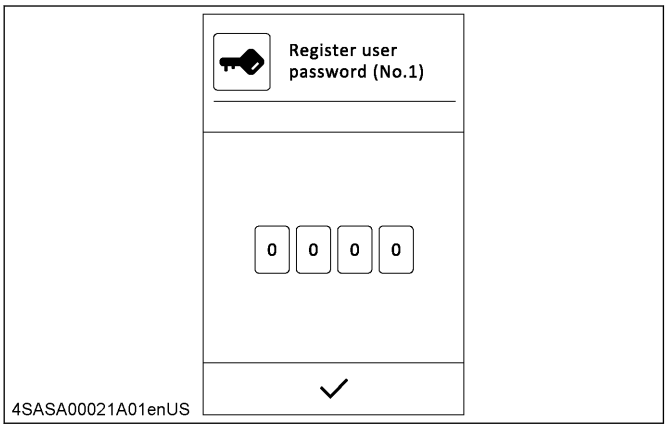

9. Rotate the jog dial to select "✔" and press the jog dial to register the new user password.

   NOTE :
   When the return switch is pressed on the new user password registering screen, the registration is not completed and returns to the previous menu screen.

2.14.8 Changing user passwords

1. On the "User password" setting screen, rotate the jog dial to select one of the previous registered password numbers.
   (For details on selecting the "User password" setting screen, see Registering new user passwords on page 42.)

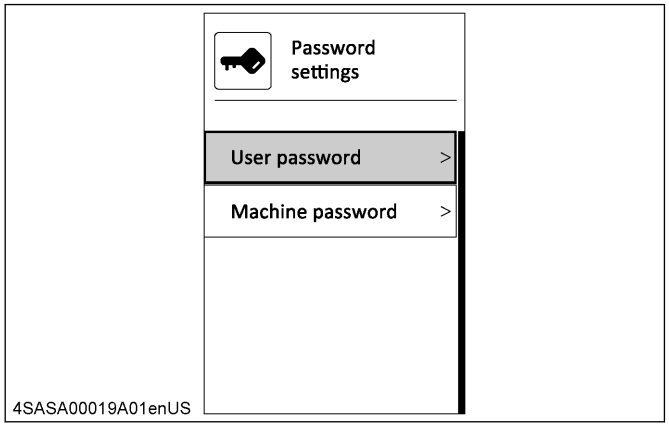

2. Rotate the jog dial to select the desired password, and press the jog dial.

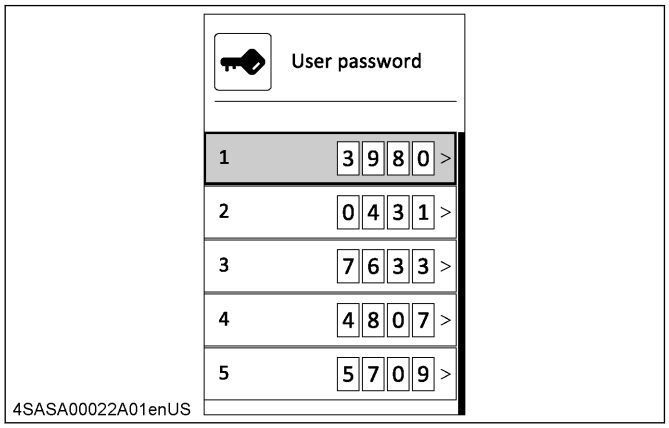

3. Rotate the jog dial to select "Change", and press the jog dial.

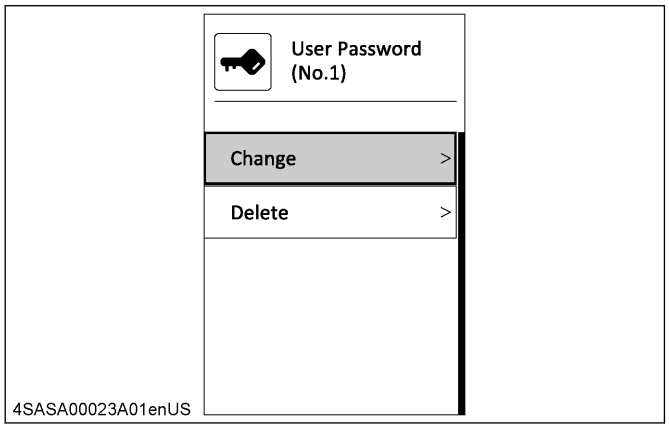

4. Enter the new user password of your choice.

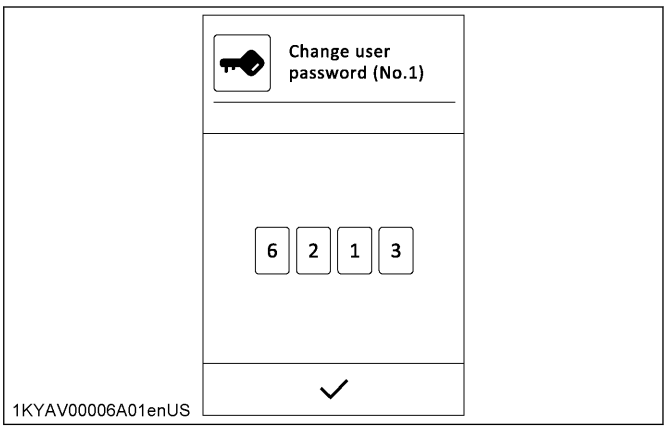

5. Rotate the jog dial to select "✔" and press the jog dial to change the user password.

   NOTE :
   When the return switch is pressed on the new user password changing screen, the change is not completed and returns to the previous menu screen.

2.14.9 Deleting user passwords

1. On the "User password" setting screen, rotate the jog dial to select one of the previous registered password numbers.
   (For details on selecting the "User password" setting screen, see Registering new user passwords on page 42.)

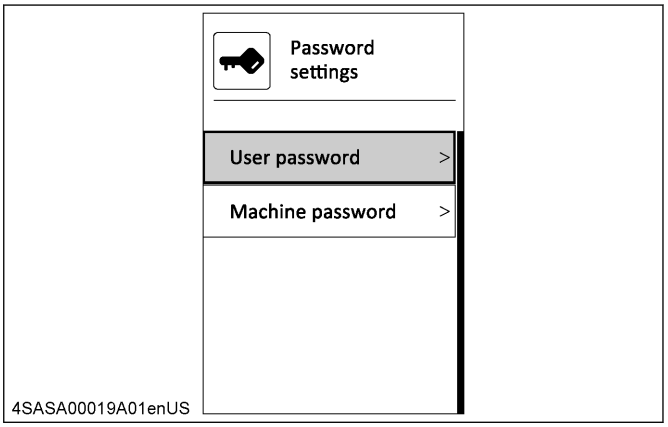

2. Rotate the jog dial to select the desired password, and press the jog dial.

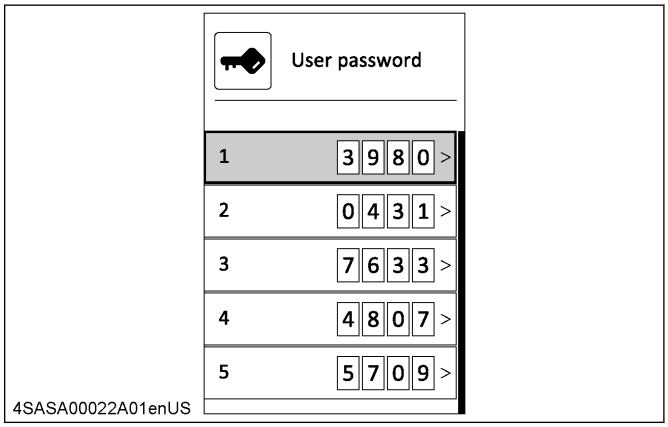

3. Rotate the jog dial to select "Delete", and press the jog dial.

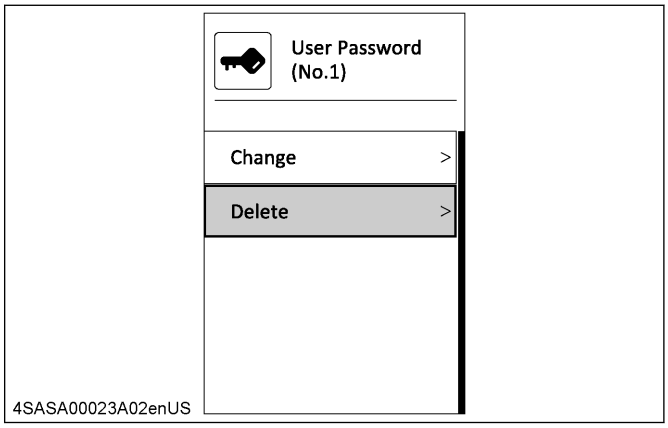

4. After confirming that the password to be deleted is correct, select "✔" and press the jog dial to complete the deletion.

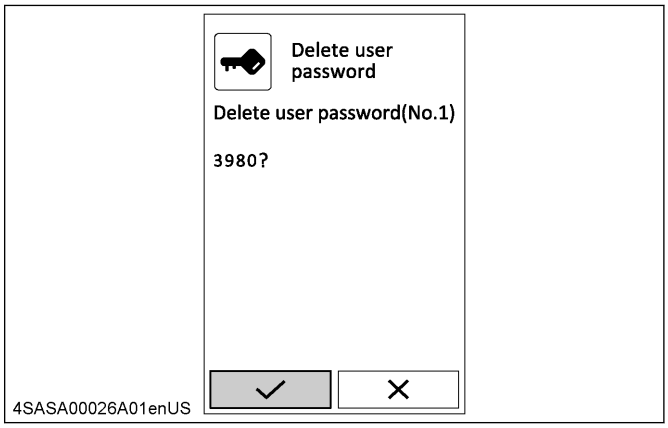

2.14.10 Changing the machine password

1. On the "Password settings" screen, rotate the jog dial to select "Machine password".
   (For details on selecting the "Password settings" screen, see Registering new user passwords on page 42.)

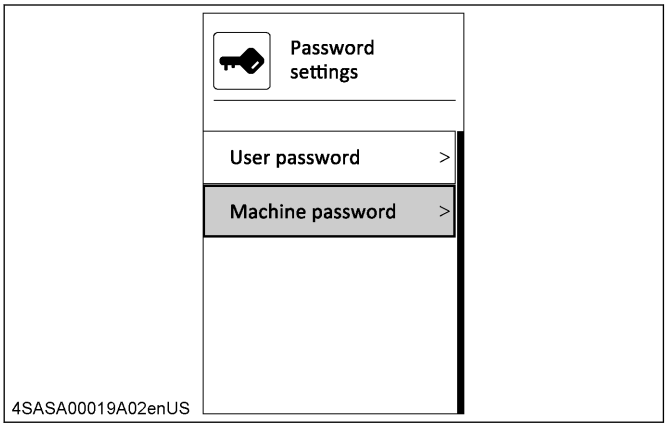

2. Enter the new machine password of your choice.

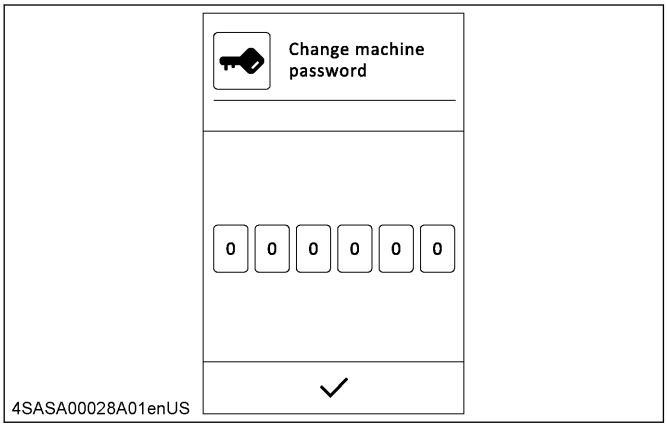

3. Rotate the jog dial to select "✔", and press the jog dial.
4. After confirming that the new machine password is correct, select "✔" and press the jog dial to confirm change.

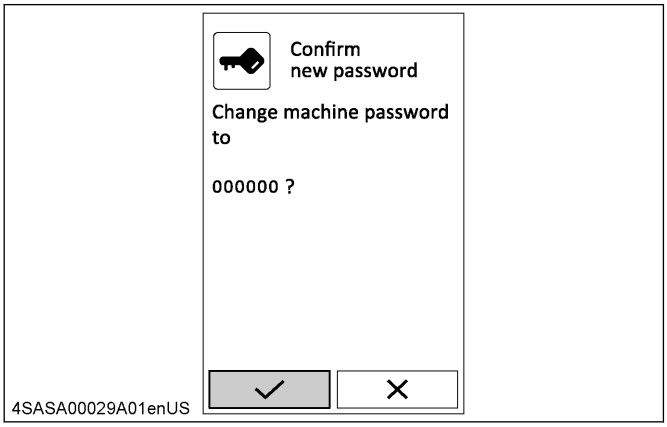

NOTE :
In the event of a forgotten machine password, it will no longer be possible to register, change, or delete user passwords. A Kubota dealer must set a new machine password.

3. Warning lamp

The warning lamp is used to indicate broken wire, short circuit, fuel shortage, and other problems.
The warning lamp starts flashing in red if any problem occurs. If the system senses a warning signal, the warning lamp starts flashing in yellow.

IMPORTANT :

- **If the warning lamp illuminates, perform the appropriate inspection and correction accordingly.**
  (See MAINTENANCE on page 90.)

NOTE :

- **If any warnings and problems are displayed, an alarm buzzer will beep.**
  (See NAVIGATION SCREENS on page 142.)
- **Contact your local Kubota dealer for details concerning care and maintenance.**

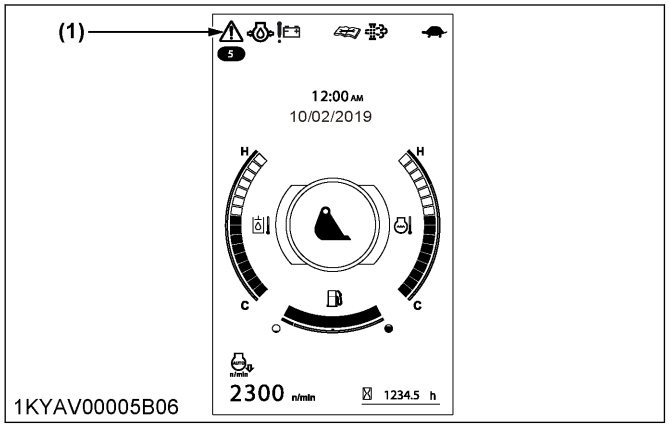

(1) Warning lamp (red, yellow)

4. Display for warnings

4.1 Remaining fuel warning

When the fuel level is very low, the ⚠ lamp (yellow) starts flashing and the following message appears on the display.

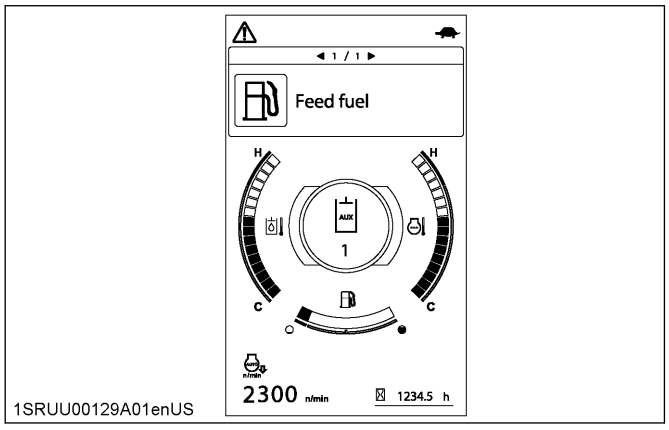

NOTE :

- **After a short period of time, the message shows up again.**

4.2 Battery charge warning

If the starter switch is turned to the **[RUN]** position without starting the engine, and the charging lamp stays off, the charging system has failed. In such a case, immediately contact your local Kubota dealer for repairs.

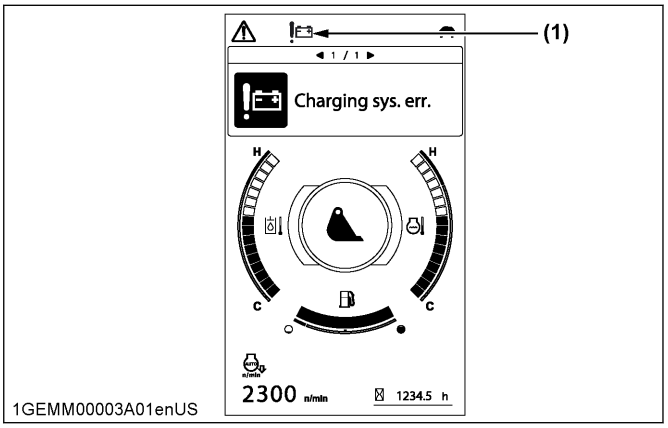

(1) Charging lamp

4.3 Low engine oil pressure warning

When the engine oil pressure drops too low, the ⚠ lamp starts flashing red and the following message appears on the display.
Immediately stop the engine and check the engine oil level.

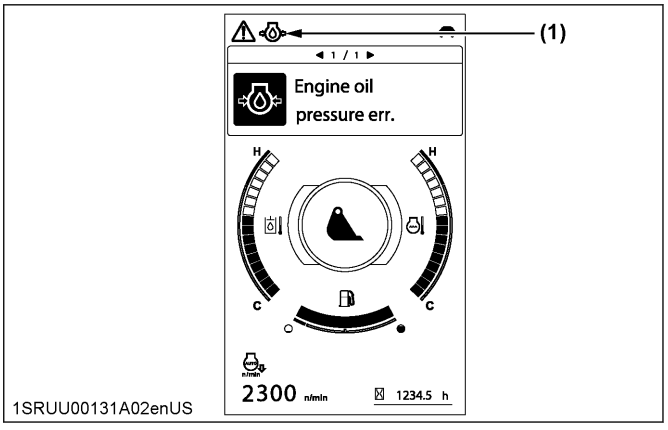

(1) Oil lamp

NOTE :

- **If the starter switch is turned to the [RUN] position without running the engine and the oil lamp stays off, then the hydraulic system may have failed.**
  In such a case, immediately contact your local Kubota dealer for repairs.

4.4 Various error warnings

If any components are detected to be experiencing trouble, a message, such as the following one, appears on-screen.
(See NAVIGATION SCREENS on page 142.)

For Example

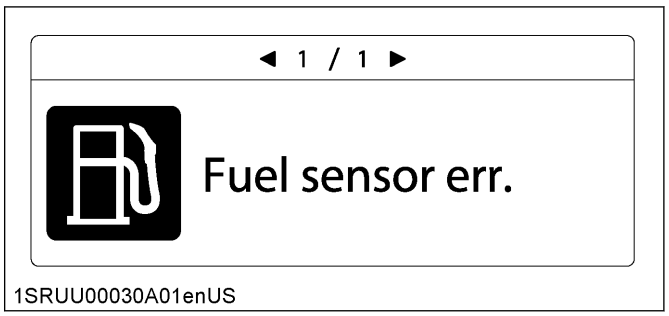

4.5 Checking error warnings

1. Press the menu switch to make the menu bar appear on the display.

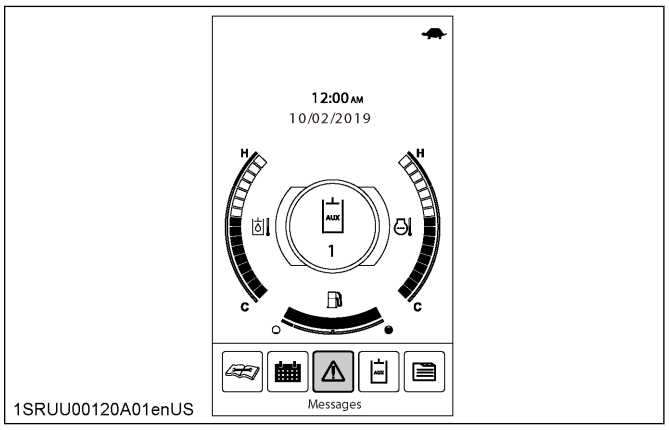

2. Press the jog dial to select "Messages", and the list of error messages appears on the display.

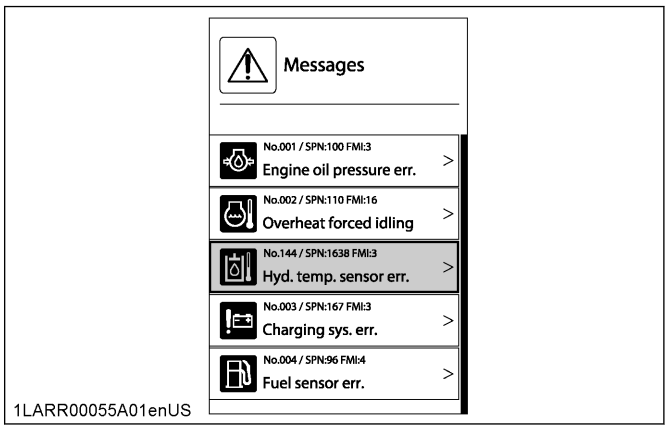

3. Rotate the jog dial to the right to select the desired item, and press the jog dial. A detailed message appears on the display.

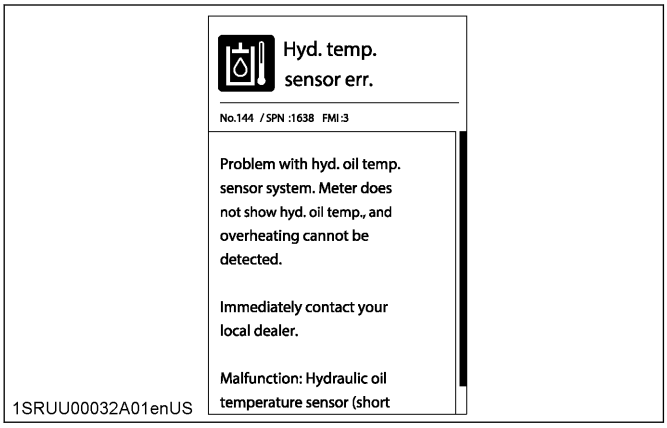

NOTE :
- **On this screen, you can use the jog dial to scroll up and down.**

HORN SWITCH

Pressing the horn switch sounds the horn.
You can use the horn even when the starter switch is in the **[STOP]** position.

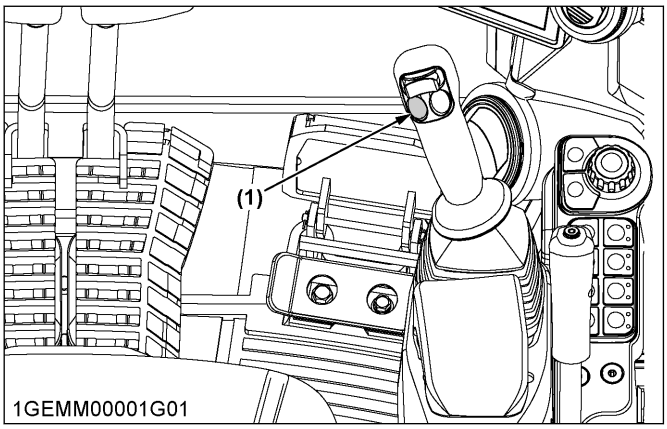

(1) Horn switch

OPERATING THE WORKING LIGHT SWITCH

1. Turn the starter switch to the **[RUN]** position.

2. Operate the working light switch as follows:
   - Press once and the working light on the boom turns on. The upper indicator lights up.
   - Press a second time and the front and rear CAB lights turn on. Both the upper indicator and the lower indicator light up.
   - Press a third time and both the working light and the CAB lights turn off. Both the upper indicator and the lower indicator go out.

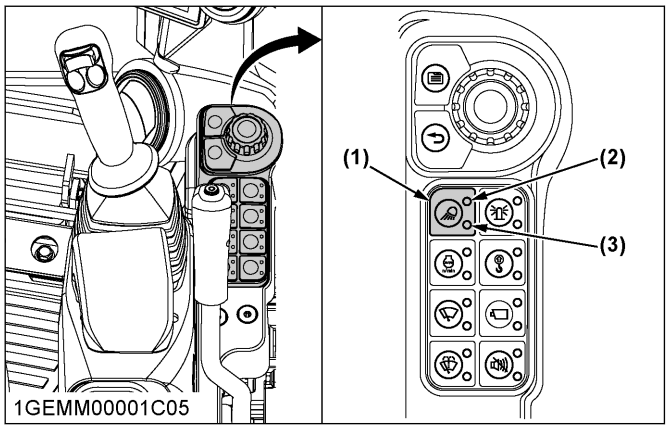

(1) Working light switch
(2) Upper indicator
(3) Lower indicator

1. Night operation

⚠ WARNING
To avoid personal injury or death:
- **When the working light and CAB light alone do not provide sufficient visibility, prepare additional stationary artificial lighting and observe the safe operating practices for night work.**
- **When working on public roads, be careful not to blind other road users.**

AUX PORT ENABLE SWITCH

It is possible to freely readjust the actuator's maximum flow rate in the AUX operating mode.
(See AUXILIARY PORT OPERATION on page 74.)

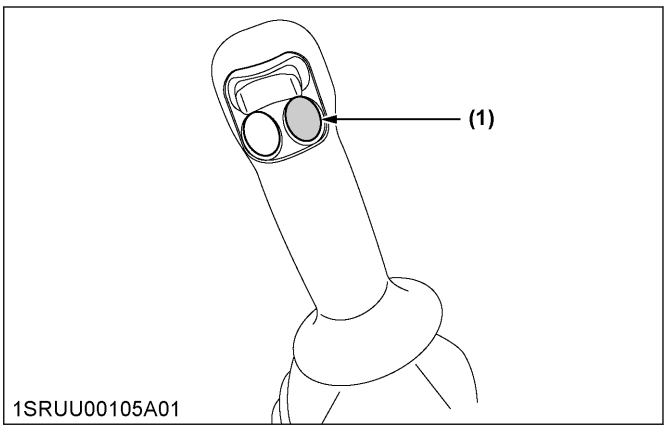

(1) AUX port enable switch

AUTO IDLE CONTROL SWITCH

The switch is used to enable and disable the Auto Idle control and the engine auto-stop control.
- Press once and the Auto Idle control activates. The upper indicator lights up. The Auto Idle indicator appears on the display.
- Press a second time and the engine auto-stop control activates. Both the upper indicator and the lower indicator light up. Both the Auto Idle indicator and the engine auto-stop indicator appear on the display.
- Press a third time and both the Auto Idle and the engine auto-stop turn off. Both the upper indicator and the lower indicator go out. Both the Auto Idle indicator and the engine auto-stop indicator disappear from the display.

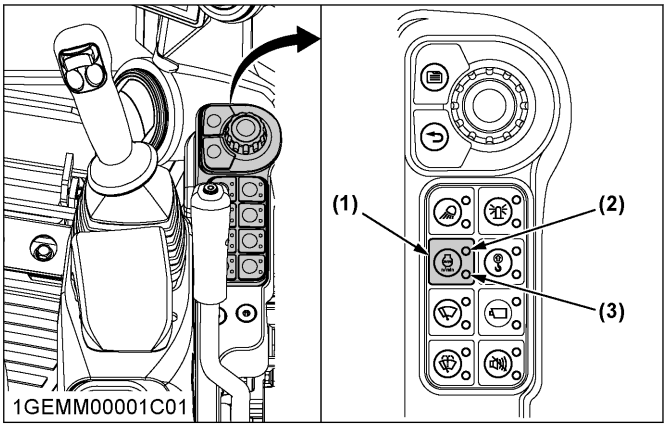

(1) Auto Idle control switch
(2) Upper indicator
(3) Lower indicator

When the engine speed has dropped to idle speed due to Auto Idle control, the Auto Idle indicator flashes.
The engine auto-stop control automatically stops the engine when no operation is performed for a preset period of time while idling. To enable the engine auto-stop, set the function to on.
(See Setting the engine auto-stop function on page 41.)

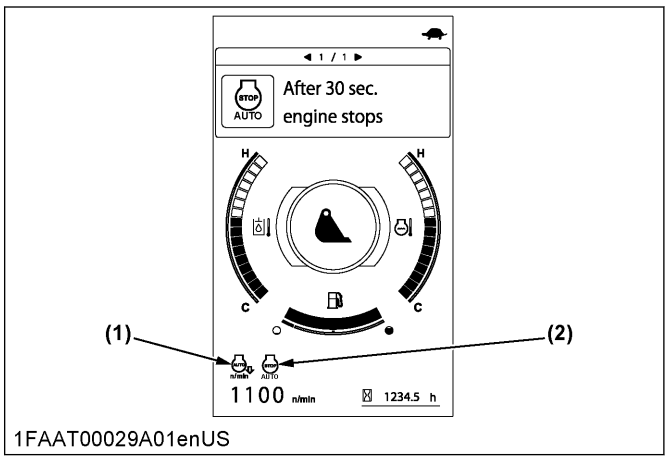

(1) Auto Idle indicator
(2) Engine auto-stop indicator

THROTTLE POTENTIOMETER

- Sit down on the operator's seat and turn the throttle potentiometer clockwise toward high speed, and the engine revs up.
- To stop the engine, turn the throttle potentiometer fully toward low speed and keep the engine at idling speed. Then set the starter switch to the **[STOP]** position.

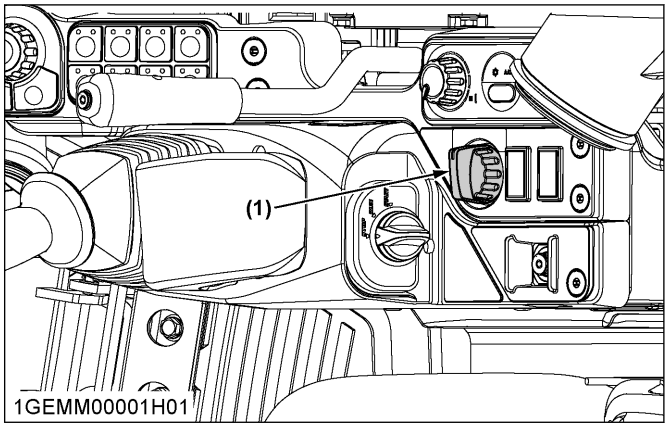

(1) Throttle potentiometer

TRAVEL SPEED SWITCH

Travel speed will increase when this switch is pushed down.
Switching the dual travel speed:

- Press the travel speed switch. The buzzer beeps twice and the travel speed changes from low to high. The speed indicator light changes from the symbol to the symbol.
- Press the travel speed switch again, the buzzer beeps once and the travel speed changes from high speed to low. The speed indicator light changes from the symbol back to the symbol.

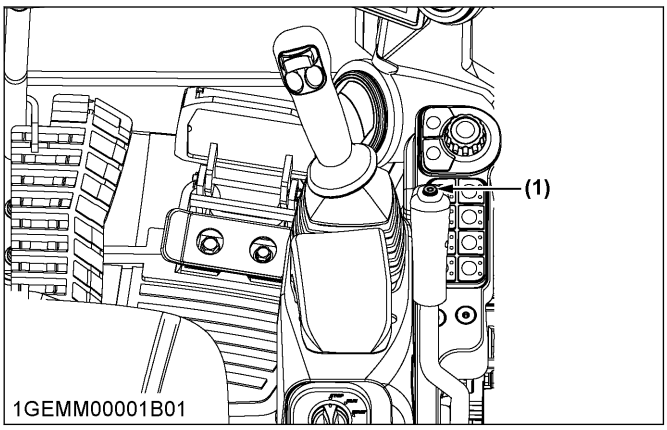

(1) Travel speed switch

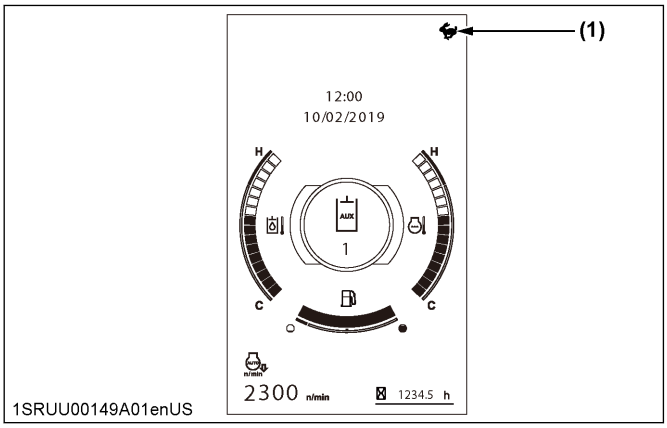

(1) Speed indicator light

NOTE :

- **When activating the travel speed switch, it must be pushed down completely.**
- **Each time the travel speed switch is pressed, the travel speed is switched between low and high.**

IMPORTANT :

- **The travel speed automatically changes into first speed (low speed) when the drive resistance increases while traveling in second speed (high speed). Thereafter, when the resistance decreases, it returns to second speed.**
- **If a track is clogged with sand or gravel while working on soft ground, lift up the track with the help of the boom, arm, bucket, and dozer blade, and let the track rotate to remove the sand and gravel.**

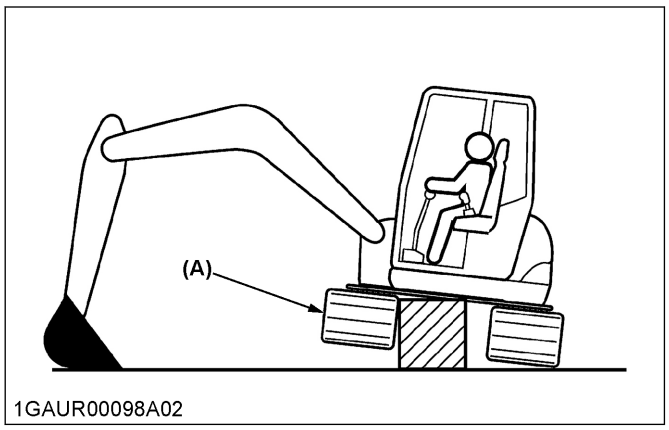

(A) Rotate to remove sand and gravel

⚠ WARNING

To avoid personal injury or death:

- **Do not push the dozer control lever into the float position as this will cause the machine to suddenly drop.**

⚠ DANGER

To avoid serious injury or death:

- **Do not work under the machine in this condition.**

INHIBIT DIESEL PARTICULATE FILTER (DPF) REGENERATION SWITCH

The Inhibit diesel particulate filter (DPF) regeneration switch (hereinafter referred to as the inhibit switch) disables the auto DPF regeneration cycle.
Activate this switch to turn off Auto DPF Regeneration when working around people, animals, plants, and flammable materials.
Certain work conditions may require the auto DPF regeneration cycle to be disabled.

- Press the inhibit switch once to turn off automatic regeneration mode.
- Press the inhibit switch once again to re-enable automatic regeneration mode.

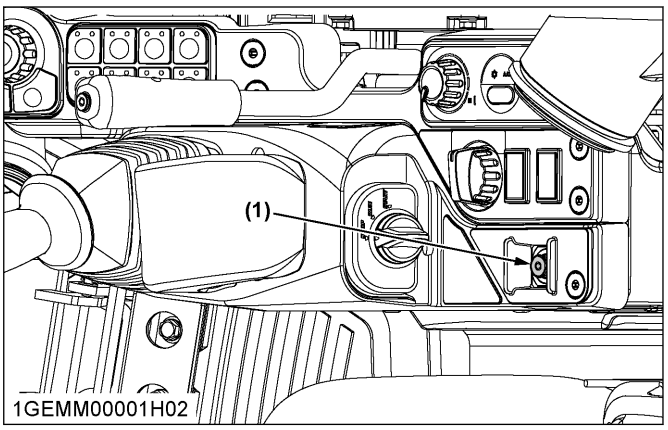

(1) Inhibit switch

BEACON LIGHT SWITCH

The beacon light switch comes standard on the machine. The beacon light itself must be installed separately. The coupler to connect the beacon light can be found behind the left speaker in a cab unit.

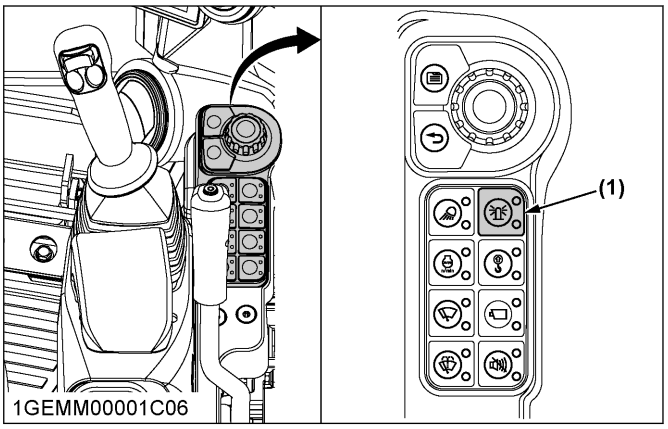

(1) Beacon light switch

TRAVEL ALARM CANCEL SWITCH

The switch is used to temporarily disable the travel alarm.
To activate this function, contact your local Kubota dealer for configuration.

⚠ WARNING

To avoid personal injury or death:

- **Check the surroundings carefully especially before pressing the travel alarm cancel switch.**
- **Especially while canceling the travel alarm, do not allow any persons within the working area.**

- While the machine is traveling, the travel alarm can be temporarily disabled by pressing the travel alarm cancel switch.
  When the travel alarm switch is disabled, the indicator lights up.

- As soon as both of the drive levers are returned to the neutral position, the travel alarm will be enabled.
  When the travel alarm switch is enabled, the indicator goes out.

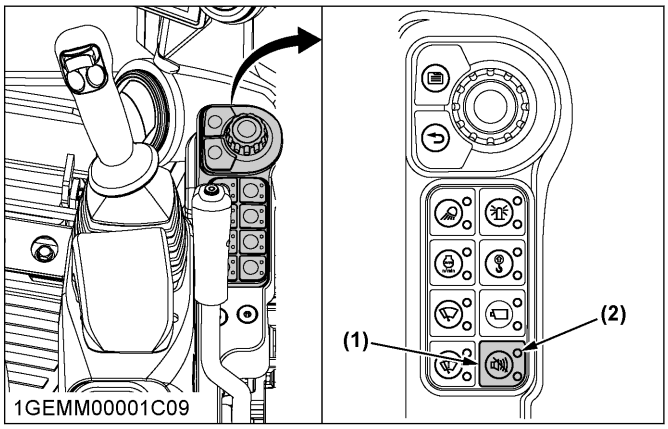

(1) Travel alarm cancel switch
(2) Indicator

NOTE :
- **The travel alarm cancel switch must be pressed every time travel operation is initiated to cancel the travel alarm.**
- **The travel alarm cancel switch is only functional while the machine is traveling.**
- **For safety purposes, the travel alarm cannot be canceled by pressing the travel alarm cancel switch during the first few seconds after the machine starts to travel. After a few seconds have passed, the travel alarm can be canceled.**

ELECTRICAL OUTLET AND USB OUTLET

The maximum power of the electrical outlet is 120 W.
If you require additional auxiliary electricity, contact your Kubota dealer for details.
The maximum output current of the USB outlet is 2 A.

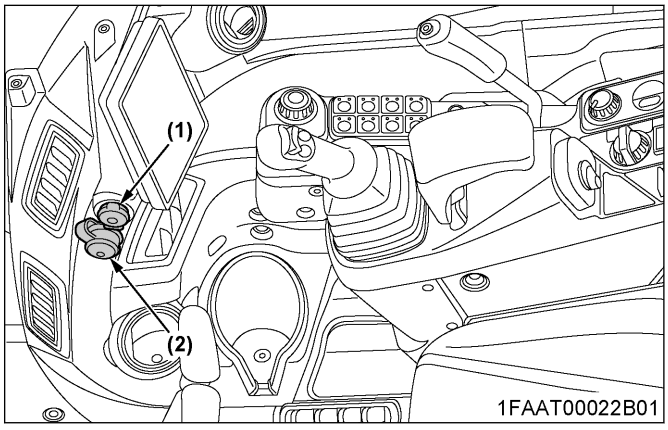

(1) 12 V electrical outlet
(2) USB (Type-A) outlet

REAR VIEW CAMERA

⚠ WARNING
To avoid personal injury or death:
- **The rear view camera should not be used as a parking and maneuvering aid, as it may not cover the requisite working area in full.**
- **When parking and maneuvering, you must not rely on the rear view camera alone. Observe the entire surroundings and comply with the respective safety regulations.**
  The rear view camera is an assistance system and is only to be used to improve and monitor the view in the immediate vicinity of the rear of the machine during turning and operating movements.
- **Any other use is considered to be a non-intended use. The operator bears sole responsibility for losses or risks arising from such use.**

- To activate the rear view camera, press the camera switch.
  The display switches from the standard screen to the rear view camera view. When the camera is switched on, the indicator lights up.

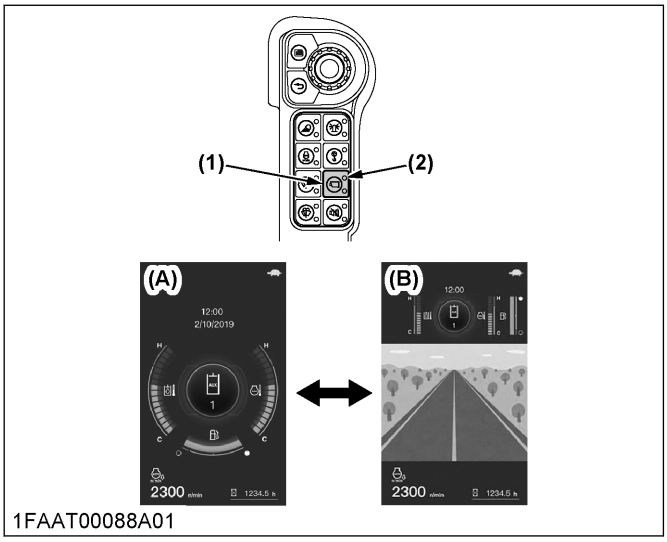

(1) Camera switch
(2) Indicator
(A) Standard screen
(B) Rear view camera view

NOTE :
- **The rear view camera may show a distorted image of the area behind the machine. The space available behind the machine may appear larger than it actually is.**
  This is due to the wide-angle capability of the system, which is designed to capture as large an area behind the machine as possible, in order to show the operator every obstacle.

1. Error messages during camera operation

⚠ WARNING

To avoid personal injury or death:

- **To prevent personal injury and material damage, all error messages must be checked and should not be ignored.**
  In the event of ambiguities, work must be discontinued until the error has been located and rectified.

If an error occurs while operating the camera, a message will appear on the display as shown in the following figure.
The message can be closed with the return switch in order to make the status indicator visible again, in which case an exclamation mark will appear in the status indicator.

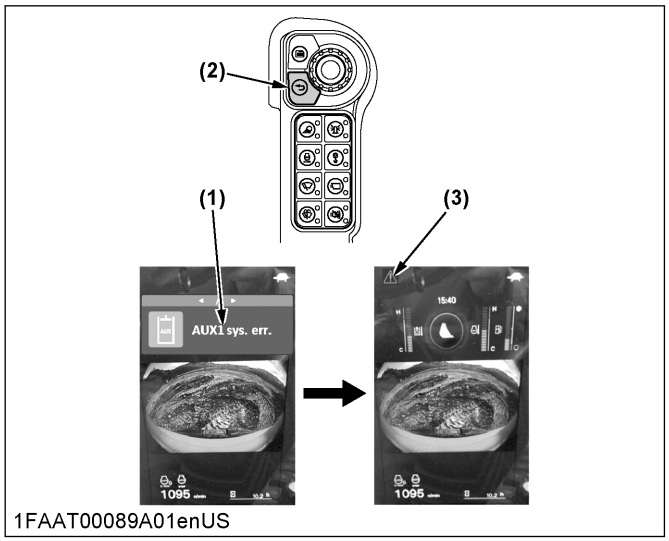

1FAAT00089A01enUS

(1) Error message
(2) Return switch
(3) Exclamation mark

IMPORTANT :

- **Closing the message will not delete or resolve the error. The error will remain active and will be marked by the exclamation mark.**

CONTROL PEDALS AND LEVERS

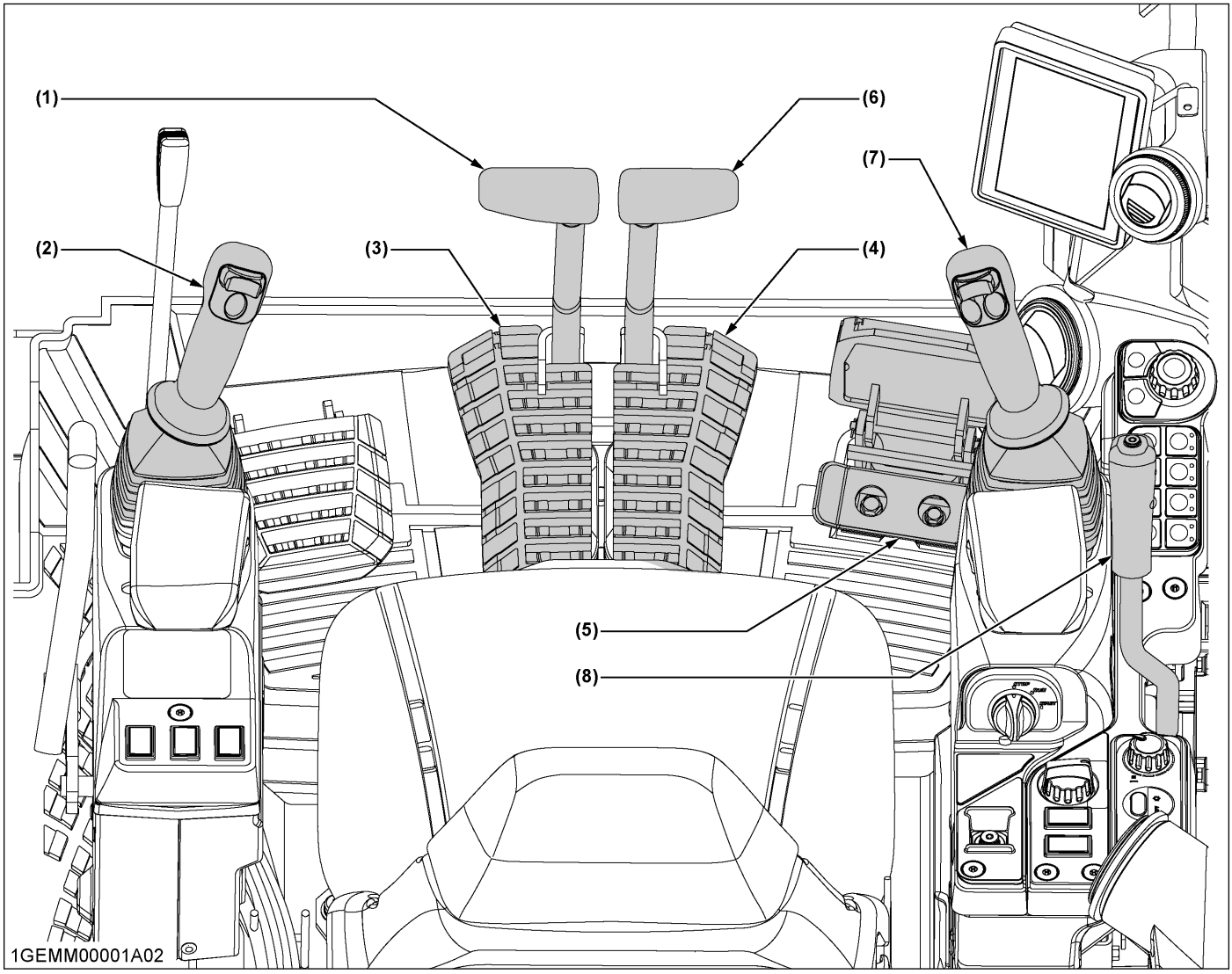

(1) Drive lever (left) 69
(2) Attachment control lever (left) 71
(3) Drive pedal (left)
(4) Drive pedal (right)
(5) Boom swing pedal 74
(6) Drive lever (right) 69
(7) Attachment control lever (right) 71
(8) Dozer control lever 71

HANDLING THE PILOT CONTROL LOCK LEVER

⚠ WARNING

To avoid personal injury or death:

- **Before exiting the machine, place the pilot control lock lever in the LOCK position.**

The pilot control lock lever is located on the left side.

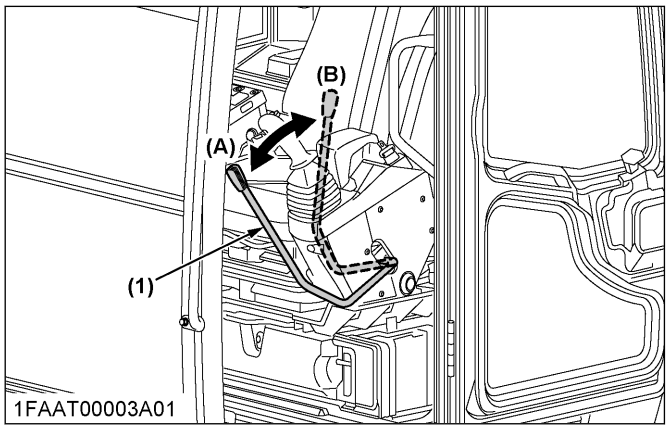

(1) Pilot control lock lever
(A) UNLOCK
(B) LOCK

CAB OPERATION

OPERATING THE WIPER AND WASHER

All cab models are equipped with a wiper/washer system.

IMPORTANT :

- **Do not turn on the wiper switch while the windscreen is open. When you turn on the wiper while the windscreen is open, the wiper can hit the adjacent cab components causing damage to the wiper.**
- **In extremely cold weather conditions, make sure the wiper rubber does not stick to the window. This can damage the wiper rubber or the wiper motor.**
- **Only switch on the wiper when the window glass is wet. If necessary, switch on the washer system first.**
- **Do not operate the washer system if its reservoir is empty as running dry could damage the pump.**

Wiper

1. Turn the starter switch to the **[RUN]** position.
2. Press the wiper switch to activate the windscreen wiper.
   - Press once and the wiper activates intermittently. The upper indicator lights up.
   - Press a second time and the wiper activates continuously. The lower indicator lights up.
   - Press a third time and the wiper stops. Both the upper indicator and the lower indicator go out.

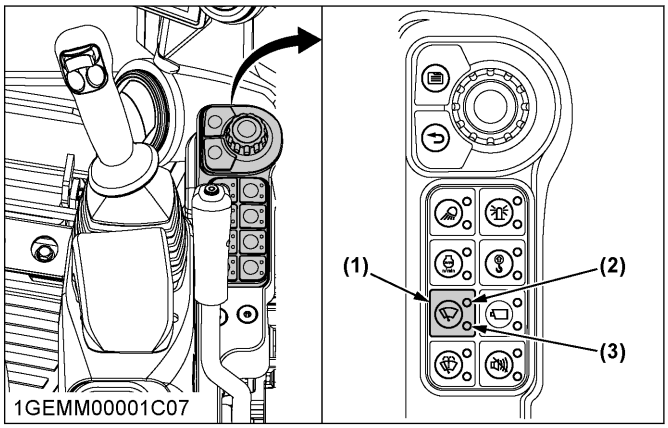

(1) Wiper switch
(2) Upper indicator
(3) Lower indicator

Washer

1. Turn the starter switch to the **[RUN]** position.
2. Press the washer switch to activate the washer.
   - The washer system runs for as long as the switch is held down. The indicator lights up.
   - Hold down the switch for longer, and the wiper starts.
   - Release the switch, and the wiper will swing several times before stopping.

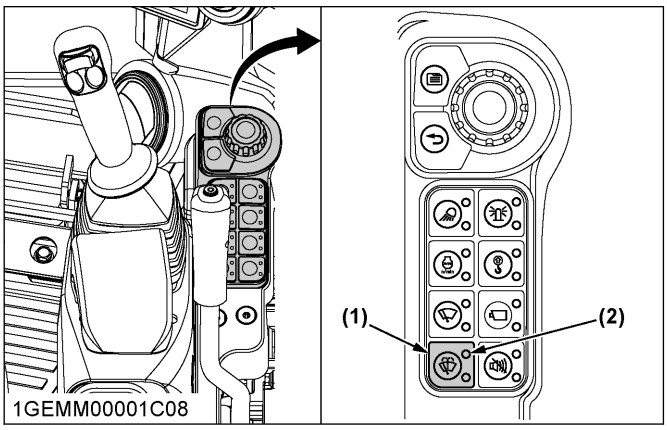

(1) Washer switch
(2) Indicator

INTERIOR LAMP

To turn on the interior lamp, set the interior lamp switch to the **[ON]** position.

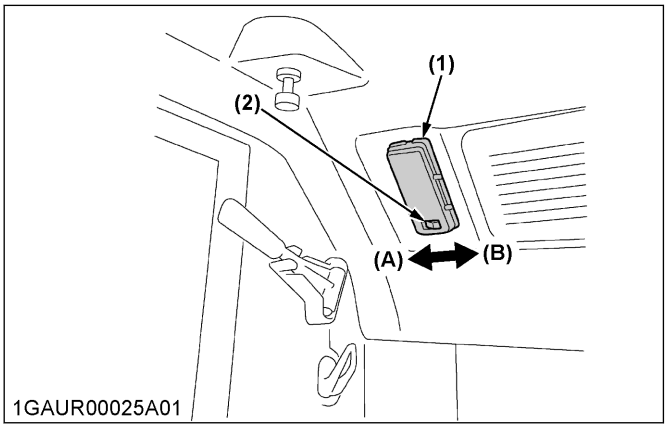

(1) Interior lamp
(2) Interior lamp switch
(A) ON
(B) OFF

OPENING AND CLOSING THE CAB DOOR

Opening

1. Unlock the CAB door.
2. Pull the knob.
3. Open the CAB door fully until fixed into place.

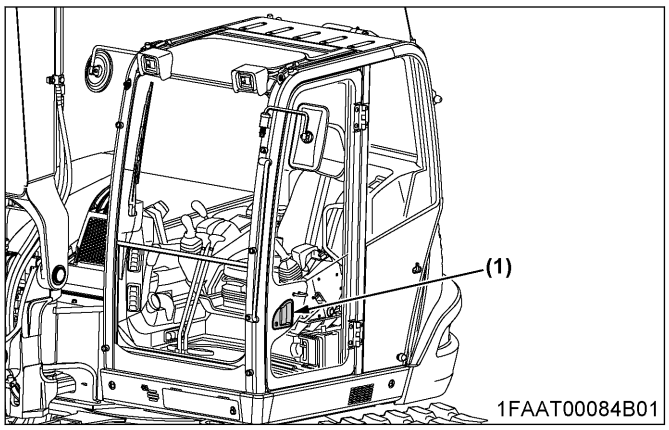

(1) Door knob (outside)

Closing

1. Push the release lever down.
2. Close the door.

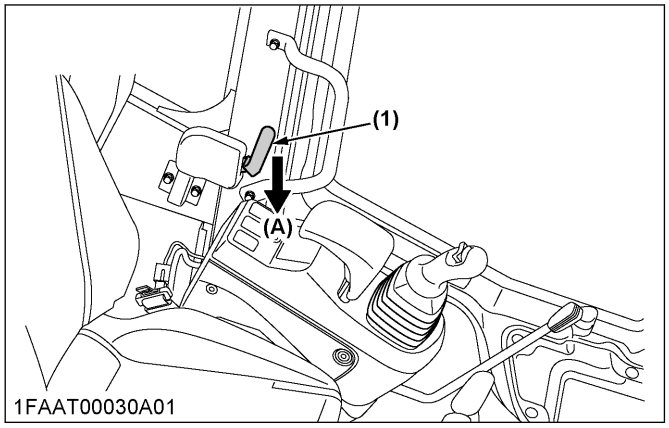

(1) Release lever (A) Push down

NOTE :

- **Always lock the door when leaving the machine.**

Opening from the inside

1. Pull the door knob back.
2. Open the door.
3. If the cab door is not closed again right away, be sure to fully open the door so that it locks into place.

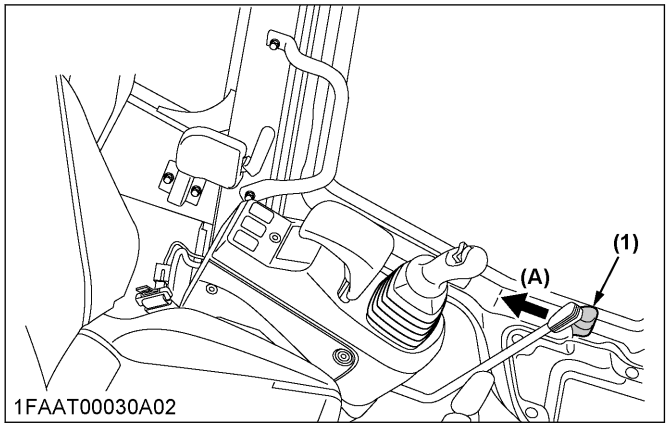

(1) Door knob (inside) (A) Pull

OPENING AND CLOSING THE FRONT WINDOW DOOR OF THE CAB

⚠ WARNING

To avoid personal injury or death:

- **Keep hands and feet away from the area between the front window and CAB frame.**

To open and close the front window, take the following steps:

1. Push the lock levers located near the grip.

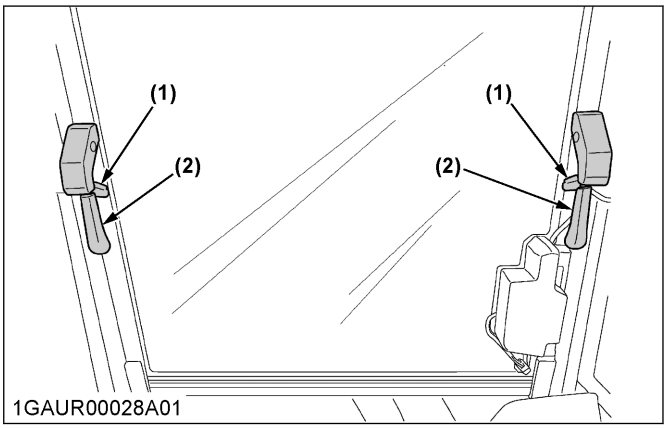

(1) Lock lever
(2) Grip

2. Hold the grips tightly with both hands. Pull the grip slightly upward and toward yourself to let the front window door slide inward.
3. Pull the front window door all the way to the lock at the back of the CAB.
4. To close the window, repeat the previous steps in reverse order.

OPENING AND CLOSING THE SIDE WINDOW OF THE CAB

1. Press the grip upwards to release the lock.
2. Pull the side window open towards the rear or towards the front.

NOTE :

- **The window can be locked into a halfway open position by fitting the lock hooks into the window sash grooves.**
  The hooks should be locked into one of the grooves during operation.

3. To close the side window, slide it forward or backward until the hook locks into either the front or the rear sash groove.

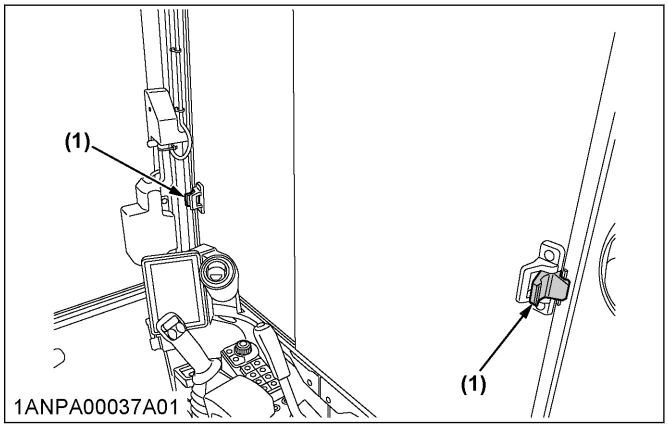

(1) Grip

REMOVING THE FRONT WINDOW BASE

1. Open the front window and fold the backrest completely forward.
2. Lift the front window base upwards and remove it from the window frame.

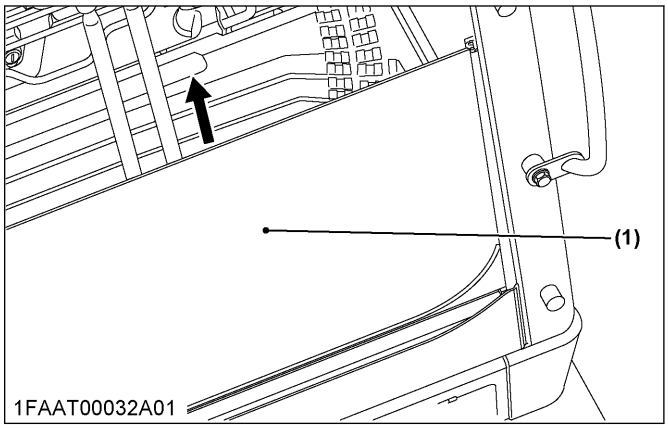

(1) Front window base

3. To reattach, carefully insert the front window base into the fixings at the cab back wall and into the locking mechanism until it snaps into place.

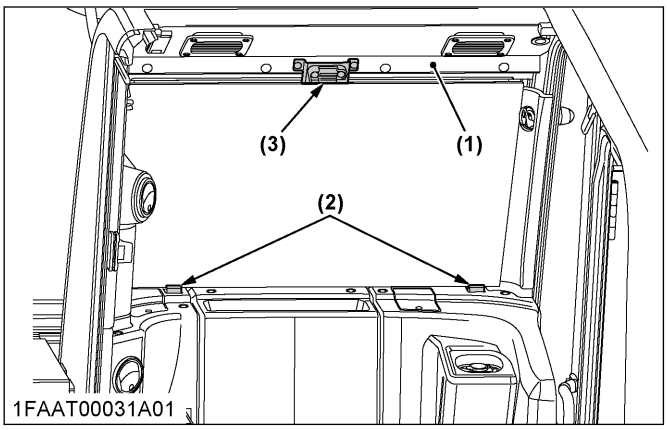

(1) Front window base
(2) Fixing
(3) Locking mechanism

⚠ WARNING
To avoid personal injury:
- **Make sure that the glass pane is properly engaged in the locking mechanism.**
  If the glass pane is not locked securely, it can fall down and cause severe injuries.

EMERGENCY HAMMER

⚠ WARNING
To avoid personal injury or death:
- **When breaking the window pane, close your eyes and cover them with your arm.**

The emergency hammer is used for breaking a window pane if the window cannot be opened quickly enough when escaping from the CAB.

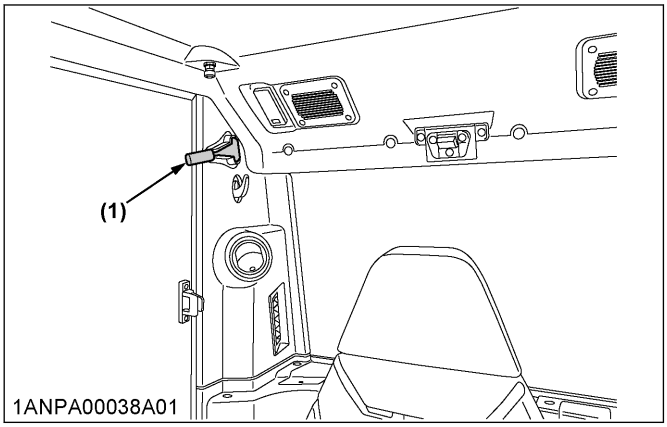

(1) Emergency hammer

AIR CONDITIONER

IMPORTANT :
- **Never block all of the air outlets because a system malfunction may occur.**

1. Air flow

Air in the CAB and fresh air introduced into the CAB flows as shown in the following figure. Adjust the eight air outlet ports to obtain the desired condition.

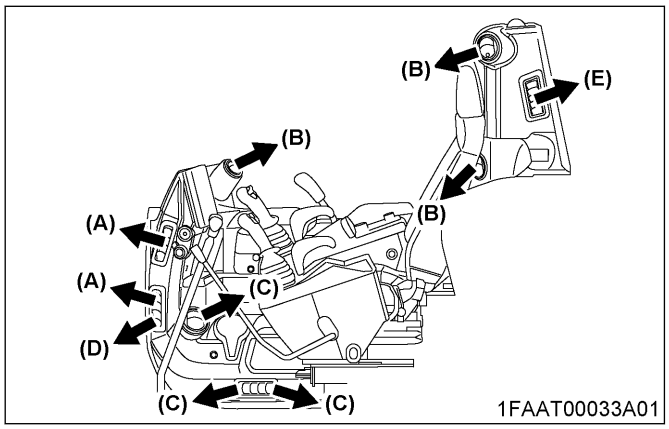

(A) FRONT WINDOW
(B) CHEST AREA
(C) FOOT AREA
(D) SIDE WINDOW
(E) BACKWARD

Set the inlet selector lever to the desired position.

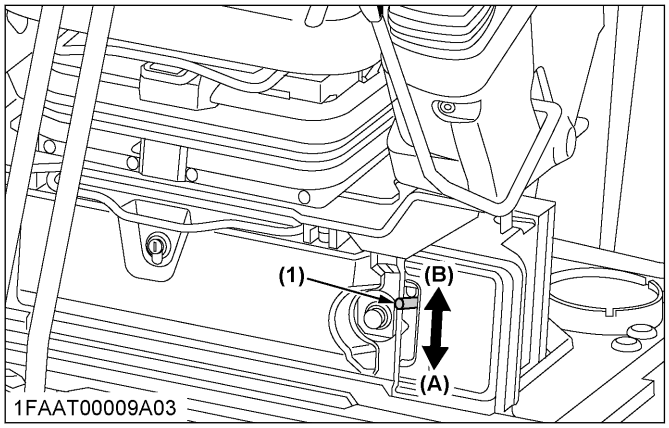

(1) Inlet selector lever

(A) FRESH AIR INLET
(B) INNER AIR RECIRCULATION

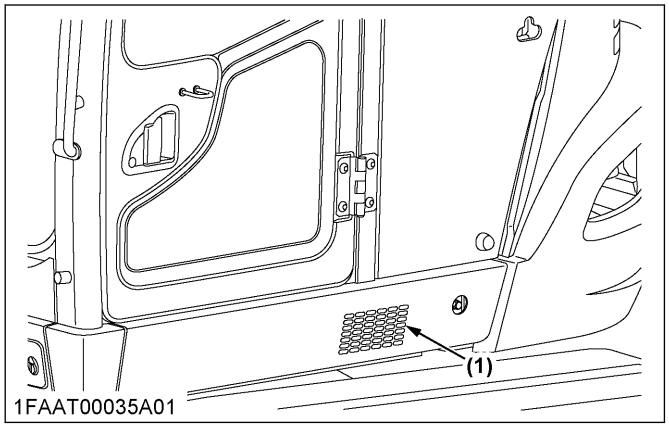

(1) FRESH AIR INLET

IMPORTANT :

- **Do not allow water to enter the fresh air inlet while washing the machine.**
- **The air-conditioner unit proper is not waterproof.**

2. Air control vent

NOTE :

- **If the window fails to defrost in extreme conditions or becomes cloudy when dehumidifying the cab, remove the moisture with a soft cloth.**

2.1 Front air outlet

The front air outlets can be independently adjusted as required. To defrost the front window, rotate the outlets toward the front window.

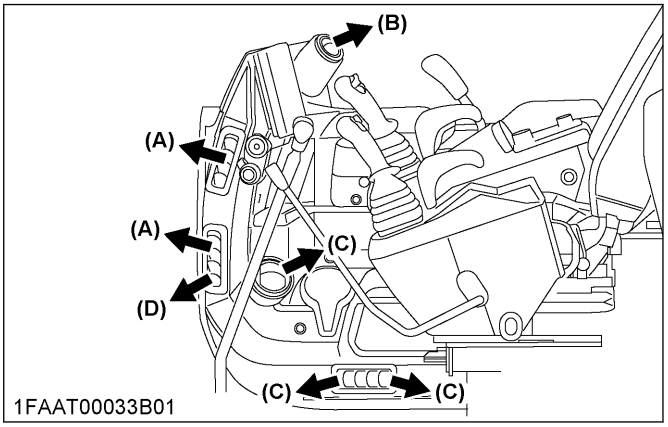

(A) FRONT WINDOW
(B) CHEST AREA
(C) FOOT AREA
(D) SIDE WINDOW

3. Control panel

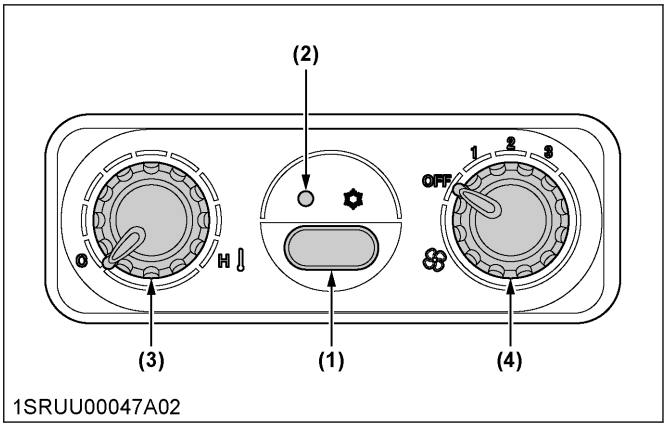

(1) Air conditioner switch
(2) Indicator light
(3) Temperature control dial
(4) Blower switch

Air conditioner switch and indicator light
Push this switch to activate the air conditioner. An indicator light will light up when the switch is set to **[ON]**. Push the switch again to turn the air conditioner off and the indicator light will go off.

Temperature control dial
Set this dial at the desired position to obtain the desired air temperature. Turn the dial to the left to obtain cooler air. Turn it to the right to obtain warmer air.

Blower switch
The air volume can be switched between 3 positions. At the **[3]** position, the maximum air volume is obtained.

4. Operation

Heating
1. Adjust the blower (**[1]**, **[2]** or **[3]**) switch and the temperature control dial to achieve the desired temperature level.

Dehumidifying-heating
1. Press and turn on the air conditioner switch.
2. Turn on the blower (**[1]**, **[2]** or **[3]**) switch.
3. Adjust the temperature control dial to the *"COOL"* or an intermediate position to achieve the desired temperature level.

NOTE :
- **Close the door while the air conditioner is on, otherwise you may overload the compressor.**

Cooling
1. Press and turn on the air conditioner switch.
2. Turn on the blower (**[1]**, **[2]** or **[3]**) switch.
3. Adjust the temperature control dial to the *"COOL"* or an intermediate position to achieve the desired temperature level.

Defrosting or demisting
To defrost or demist the windshield, take the following steps.
1. Open the front air outlet and direct it to the windshield.
2. Set the blower switch and the temperature control dial to the **[3]** and *"WARM"* (rightmost) positions, respectively.

OPERATING THE ENGINE

⚠ WARNING

To avoid personal injury or death:

- **Read and understand the safe operation section.**
  (See SAFE OPERATION on page 7.)
- **Obey the safety labels on the machine.**
- **To avoid the danger of carbon monoxide poisoning, do not operate the machine indoors without proper ventilation.**
- **Always start the engine from the operator's seat. Do not start the engine while standing next to the machine. Before starting the engine, sound the horn to alert people standing nearby.**

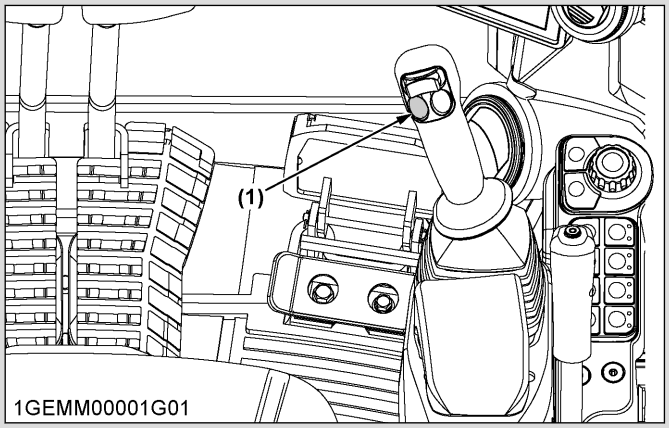

(1) Horn switch

IMPORTANT :

- **Do not use starting fluid or ether.**
- **To prevent overloading the battery and starter, avoid engaging the starter for more than 10 seconds.**
- **If the engine does not start in 10 seconds, please wait 20 seconds or more, before attempting to restart.**

STARTING THE ENGINE

⚠ WARNING

To avoid personal injury or death:

- **The operator should not depend solely on the warning lamps, but should always conduct the routine checks.**
  (See MAINTENANCE INTERVALS on page 91.)

The engine can be started by entering a registered password using the keypad.
Manage the following 2 password types.

User password
This is a 4-digit password which is required in order to start the engine.
Up to 10 user passwords can be registered at a time.

Machine password
This is a 6-digit password which is required in order to register, change, or delete user passwords.

1. Before starting the engine, make sure that all control levers are in the neutral position.

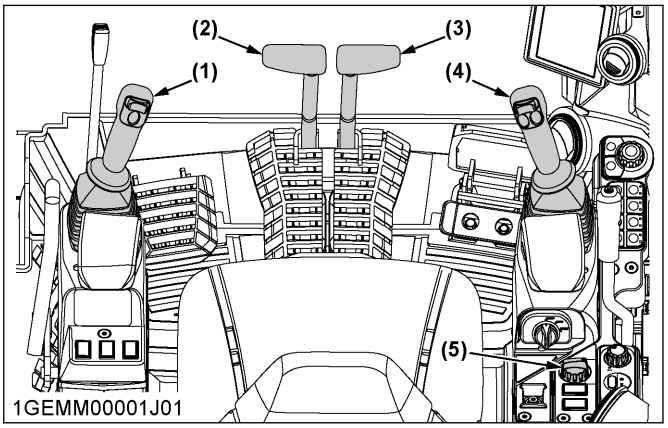

(1) Attachment control lever (left)
(2) Drive lever (left)
(3) Drive lever (right)
(4) Attachment control lever (right)
(5) Throttle potentiometer

2. Pull the pilot control lock lever all the way back to the LOCK position.

3. Put the throttle potentiometer in the middle, between and symbols. The Auto Idle control switch is in the *"OFF"* position.
   (See AUTO IDLE (AI) OPERATION on page 82.)

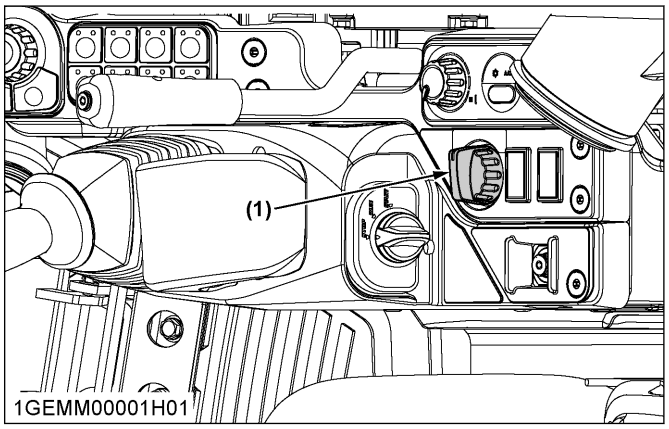

(1) Throttle potentiometer

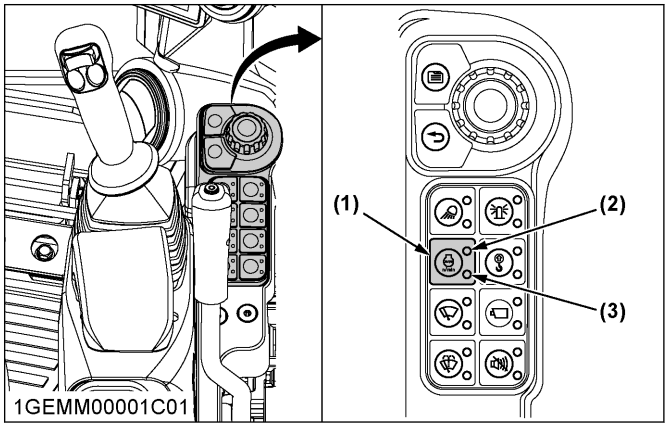

(1) Auto Idle control switch
(2) Upper indicator
(3) Lower indicator

4. Turn the starter switch to the **[RUN]** position.

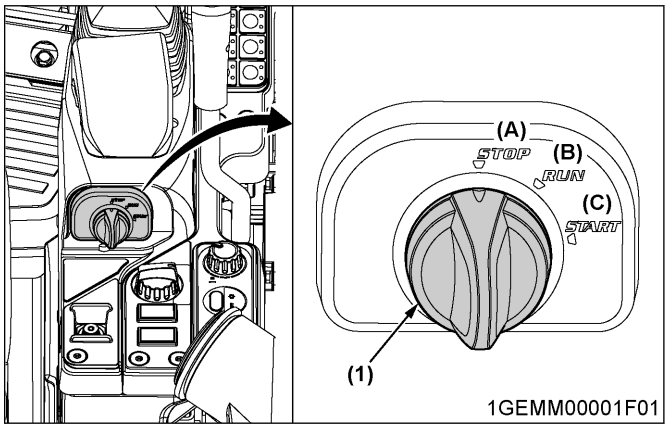

(1) Starter switch

(A) STOP
(B) RUN
(C) START

5. Enter a user password using the keypad. Once 4 digits have been entered, authentication commences.

When the user password has been verified, the normal screen appears and the engine can be started.
(For details on registering user passwords, see Registering new user passwords on page 42.)

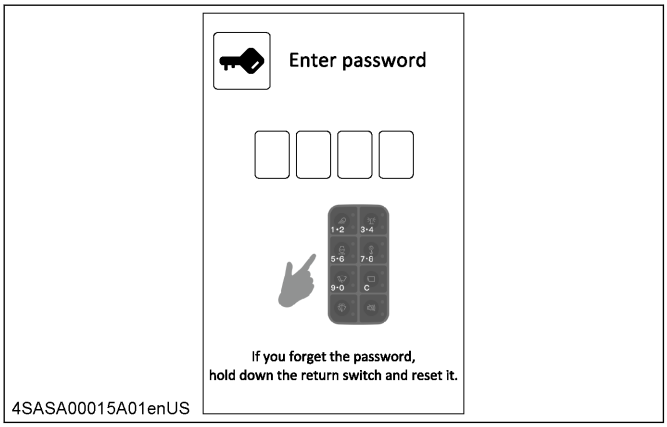

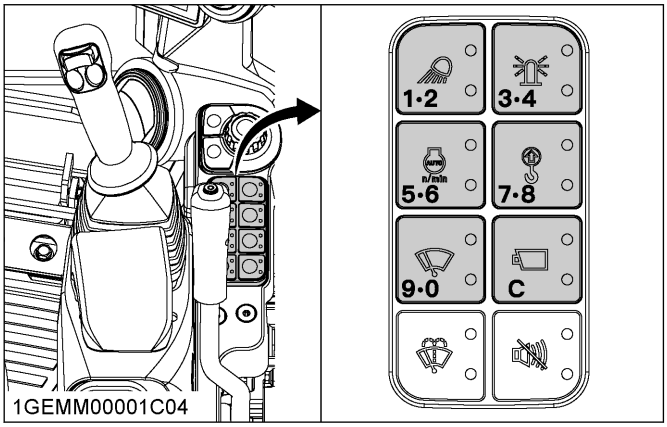

NOTE :

- **In the event of a mistaken entry, it is possible to delete the entry by pressing *"C"* (Clear) before entering the forth digit, and then re-enter the password.**
- **If password authentication fails 6 times, the alarm sounds for 30 seconds.**
  (The alarm continues to sound even if the starter switch is turned to the [STOP] position.)
- **In the event of a forgotten user password, go to the normal screen by holding down the return switch while on the user password entry screen, and either change the password or register a new password.**
  When starting the engine after registering or changing a user password, turn the starter switch to the [STOP] position, return it once again to the [RUN] position, and enter the user password.
- **If the password has not been authenticated, the pilot lock lever does not unlock when lowered, and all but a few of the electrical components are inoperable.**

- **The password stays authenticated for 3 minutes after turning the starter switch to the [STOP] position.**
  Therefore, after stopping the engine, it is possible to turn the starter switch back to the [RUN] position and perform tasks such as restarting the engine and releasing pressure from the hydraulic system without re-entering the password, as long as no more than 3 minutes has passed.
- **If the display is left on the password entry screen for a fixed amount of time, all but a few of the electrical components automatically turn off in order to preserve the battery (and the display also goes dark).**
  When starting the engine, turn the starter switch to the [STOP] position, return it once again to the [RUN] position, and enter a user password.

IMPORTANT :
- **If the electrical components automatically turn off after leaving the display on the password entry screen for a fixed amount of time, do not leave the machine in this state for an extended period of time.**

6. Hold the starter switch at the **[RUN]** position until the message "Preheating" disappears from the screen.

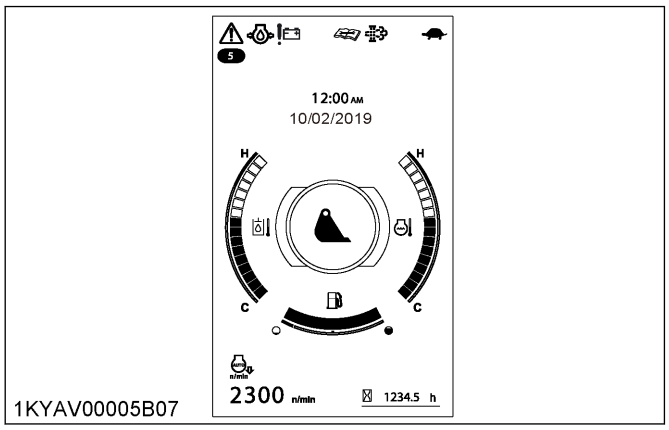

7. Now make sure that the and marks appear on-screen. If they do not appear, the system has malfunctioned. Contact your local Kubota dealer for repairs.
8. Turn the starter switch to the **[START]** position and release it after the engine has started.
9. Check if all warning lamps have gone out. Should a warning lamp still be lit up, stop the engine and check for the cause.

IMPORTANT :
- **The starter motor draws a large amount of current. Avoid running it for longer than 10 seconds continuously.**
  If the engine fails to start within 10 seconds, turn the starter switch to the [STOP] position, wait for 20 seconds or longer and repeat steps 4 through 8.
- **If the battery is dead and must be connected to another battery with jumper cables, use a 12 V battery. Never use 24 V batteries.**

NOTE :
- **If you keep the pilot control lock lever in the UNLOCK position and try to start the engine, "Up lock lever" appears on the meter panel and the engine will not start. Before starting the engine, make sure that the pilot control lock lever is set at the LOCK position.**

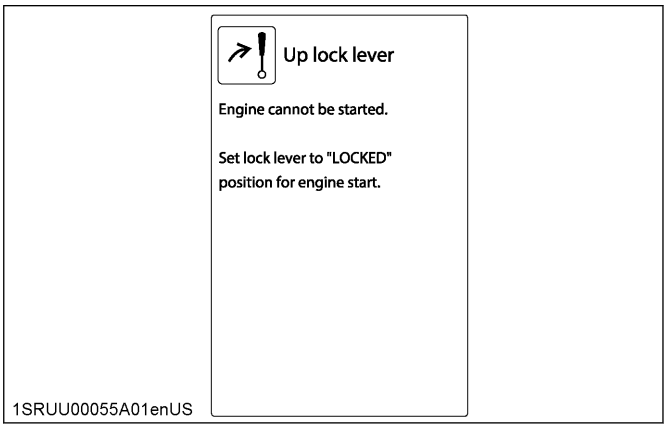

- **When the engine starts, the meter may momentarily turn off and a beep may sound. This is not a problem.**

STARTING THE ENGINE UNDER COLD CONDITIONS

⚠ WARNING
To avoid personal injury or death:
- **Make sure that the pilot control lock lever is in the LOCK position during warm-up.**

Make sure the Auto Idle is turned off (lamp off).

1. Pull the pilot control lock lever all the way back to LOCK position.
2. Turn the throttle potentiometer toward (high speed) position.
3. Turn the starter switch to the **[RUN]** position. Hold the switch at this position until the message "Preheating" disappears from the screen.
4. Turn the starter switch to the **[START]** position.
5. Once the engine starts, release your hand from the switch. The switch will return to the **[RUN]** position.

6. If the engine fails to start, turn the starter switch to the **[STOP]** position and repeat steps 3 through 5.

   IMPORTANT :
   - **Let the engine warm up after start-up for approximately 10 minutes under no load conditions. If the hydraulic fluid temperature is too low, the operation will be affected. Do not operate the excavator under full load until the engine has sufficiently warmed up.**

STARTING WITH AN AUXILIARY BATTERY

⚠ WARNING

To avoid personal injury or death:
- **Battery gases can explode. Do not smoke and keep sparks and flames away.**
- **Do not start the engine with an auxiliary battery if the machine battery is frozen.**
- **Do not connect the black jumper cable to the negative (-) terminal of the machine's battery.**
- **Wear eye protection and rubber gloves.**

IMPORTANT :
- **This machine has a negative (-) ground 12 V starting system.**
- **Use only the same voltage when using an auxiliary battery.**
- **Using a higher voltage will cause damage to the electrical system. When using an auxiliary battery, only the compatible (same) voltage is permitted.**

Observe the following guidelines when starting with an auxiliary battery.

1. Bring another machine with the same battery voltage as close as possible to the machine.

   IMPORTANT :
   - **The machines must not come in contact with each other.**

2. Set the levers and pedals of both machines in their neutral positions and put the pilot control lock lever in the LOCK position.
3. Open the side cover.
   (See OPENING AND CLOSING THE COVERS on page 95.)
4. Ensure the vent caps are securely in place (if equipped).
5. Connect the terminal of the red jumper cable with the plus (+) terminal of the low battery and connect the other end of the cable to the plus (+) terminal of the auxiliary battery.
6. Connect the black negative cable to the minus (-) terminal of the auxiliary battery.
7. Connect the other end of the black negative cable (coming from the auxiliary battery) to the machine frame as far away as possible from the low battery.
8. Start the engine of the helping machine and let it run for a while. Start the machine with the low battery.
9. Disconnect the jumper cables in the reverse sequence (steps 7, 6, 5).

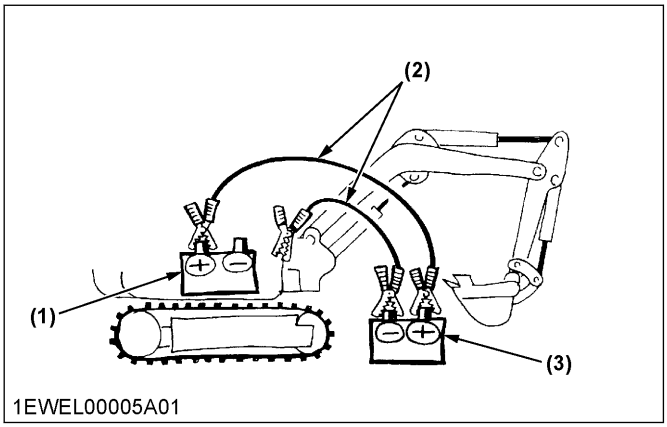

(1) Low battery
(2) Jumper cables
(3) Auxiliary battery

CHECK POINTS AFTER STARTING THE ENGINE

Check the following points after starting the engine, but before starting operation:

1. Put the throttle potentiometer in the middle between and symbols and let the engine idle for approximately 5 minutes. This allows the engine lubricant to warm up and reach every part of the engine.

2. Once the engine has warmed up, check:
   - the warning lamp *"Engine oil pressure"* has gone out.
   - the warning lamp *"Battery charge"* goes out when engine speed is increased.
   - the color of the exhaust is normal and no abnormal noises or vibrations are heard or felt.
   - no fluid is leaking from pipes or hoses.

IMPORTANT :
- **Stop the engine immediately if any of the following conditions occur:**
  - **The engine's rpm increases or decreases suddenly.**
  - **Sudden abnormal noises are heard, such as engine knocking.**
  - **Exhaust fumes are black.**
  - **Warning lamp for engine oil lights up during operation.**
- **In such cases, the machine must be checked and serviced by your local Kubota dealer.**

STOPPING THE ENGINE

⚠ WARNING
To avoid personal injury or death:
- **Lower all work attachments to the ground.**

1. Place the bucket and dozer on the ground.
2. After slowing the engine to idle, turn the starter switch to the **[STOP]** position.
3. Set the pilot control lock lever to the LOCK position.

1. Engine stop button

The engine stops when the starter switch is turned to the **[STOP]** position. If the engine does not stop, pull the stop button to stop the engine.

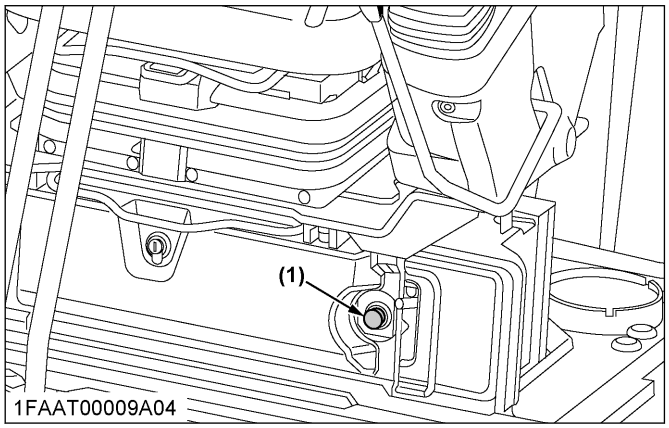

(1) Stop button

IMPORTANT :
- **Return the stop button to its original position after the engine stops.**

NOTE :
If the engine stop button is activated, a message will appear on the display as shown in the following image.

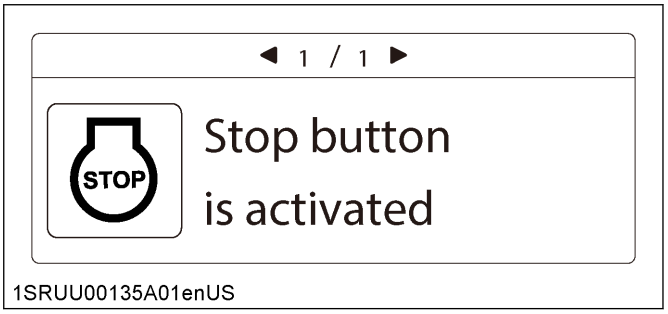

2. Overheating countermeasures

⚠ WARNING
To avoid personal injury or death:
- **Do not open the radiator cap during operation or immediately after engine shutdown. Otherwise, steam or very hot coolant may escape and cause scalding. Make sure the radiator has cooled down enough before opening its cap.**

If the coolant temperature rises close to, or above, the boiling point (**[H]** on the coolant temperature gauge, overheat condition), take the following steps:

1. Stop operating the machine and relieve the engine of any load.
2. Do not shut off the engine suddenly. Before shutting off the engine, keep it idling under no load for about 5 minutes.
3. Stay away from the engine or overflow for 10 minutes or until the steam overflow stops.
4. Be sure that there is no danger of getting scalded. Check and remove the cause of the overheat. (See TROUBLESHOOTING OF THE ENGINE AND OTHER SYSTEMS on page 129.) Once the trouble is resolved, the engine may be restarted.

DPF REGENERATION

⚠ WARNING
To avoid personal injury or death:
- **Read and understand the Safe operation section of this manual.**

This machine is equipped with a DPF (diesel particulate filter) muffler.
The diesel particulate filter serves to trap particulate matters (PM) that are contained in exhaust gases and to automatically burn (DPF regenerate) these matters.

In the regeneration, buzzer sounds and warning light blink and display shows messages. Follow the instructions.
(See AUTOMATIC DIESEL PARTICULATE FILTER (DPF) REGENERATION on page 148.)

OPERATING THE EXCAVATOR

OPERATION OF A NEW MACHINE

The operation and maintenance of a new machine impacts its life span. Your new machine has been carefully checked and tested before leaving the factory. In spite of this, all movable components must be run-in during the first 50 work hours. Do not work with full rpm and full loads during this period. It is most important to run-in your machine properly in order to achieve its full performance and longevity. During the running-in, the following points should be adhered to in all cases.

Do not work with full engine rpm or full loads during the first 50 working hours

- Let the engine warm up sufficiently in the cold season.
- Do not let the engine rev-up more than necessary except the DPF regeneration.

Oil change in the run-in stage

The lubrication oil plays a specific and important role during the run-in phase of the machine. The numerous movable parts are not yet run-in, so many fine metal particles are generated and cause damage and shorten the life of many components. Pay attention to the oil-change intervals and complete them sooner rather than later.

Details regarding oil change intervals can be found in a different section.

(See Changing the engine oil on page 111.)

PREPARATIONS BEFORE STARTING THE MACHINE

1. Adjusting the operator's seat

⚠ WARNING

To avoid personal injury or death:

- **Make sure that the seat and console are completely secured after each adjustment.**

IMPORTANT :

- **Do not step on the console adjust lever nor force it to move up. Otherwise the console adjust lever may become deformed, affecting its performance.**

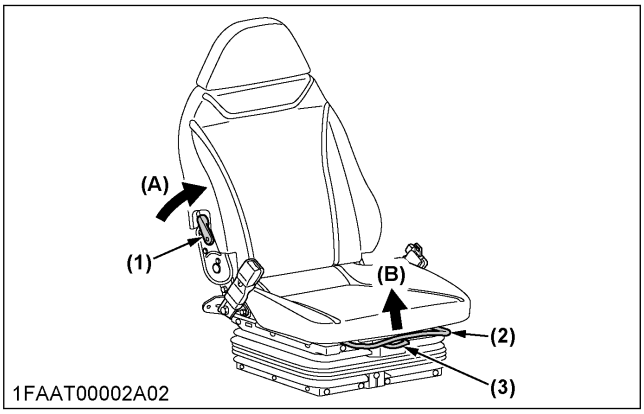

(1) Backrest tilt adjust lever
(2) Travel adjust lever
(3) Height and weight adjust switch
(A) UNLOCK
(B) UNLOCK

Tilt adjustment

Take the load off the backrest and pull the backrest tilt adjust lever in the direction of (A). Set the backrest to the desired sitting position and release the lever. The backrest should be adjusted so that the operator can safely operate the control levers with the back resting completely on the backrest.

Travel adjustment

Pull the travel adjust lever in the direction of (B) and slide the seat backward or forward, as required. The seat will lock into position when the lever is released.

Height and weight adjustment

Use the height and weight adjust switch to adjust the height and suspension (operator's weight) of the air suspension seat to achieve a comfortable cushioning effect.

The seat height adjustment is step-less.

- To raise the seat for a heavier operator, pull the lever up. While the lever is held in the upward position, the seat keeps moving up until it reaches the maximum height.

  NOTE :
  - **The seat can only be moved up when the machine is on.**

- To lower the seat for a lighter operator, push the lever down. While the lever is held in the downward position, the seat keeps moving down until it reaches the minimum height.

  NOTE :
  - **The seat can be moved down even if the machine is off.**

IMPORTANT :
- **Do not hold the height and weight adjust switch in the upward position for longer than 30 seconds. The air suspension may get damaged.**
- **The seat is not designed to support operators over 150 kg.**

Console adjustment
Pull up the console adjust lever upwards into the UNLOCK position, and move the lever back and forth to adjust the horizontal position of the console.
Release the lever when the console is in the desired position, and make sure the adjust lever is locked back into place.

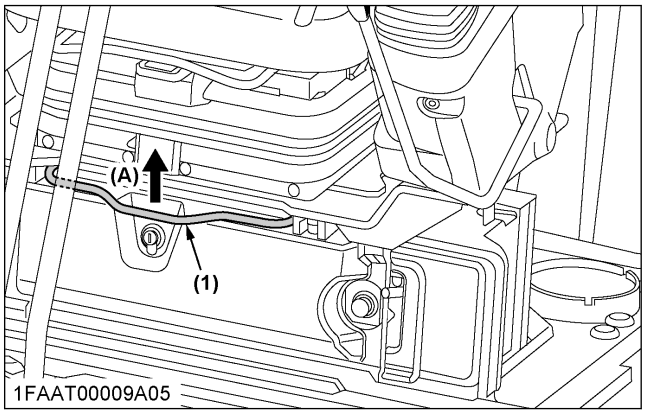

(1) Console adjust lever (A) UNLOCK

2. Using the seat belt

⚠ WARNING
To avoid personal injury or death:
- **Always use the seat belt with a ROPS and OPG protection structure. Adjust the operator's seat to the optimal position and buckle it up.**
- **Always fasten the seat belt securely before starting the engine.**

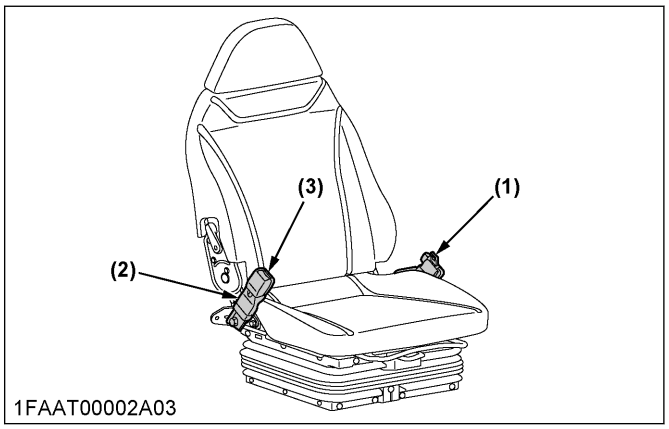

(1) Seat belt
(2) Socket
(3) Button

Fastening the seat belt
1. Pull the seat belt from the retractable (left) side of the operator's seat.
2. Insert the fixture of the seat belt into the socket at the right side of the operator's seat until the fixture clicks deep into position.

Releasing the seat belt
1. Press the red button of the socket to release the seat belt.
   The seat belt reels itself in and gets retracted to the left side.

IMPORTANT :
- **When removing the seat belt, store the belt straight.**
  If you store the belt without straightening it, the seat belt locking mechanism may not work properly.

STARTING THE MACHINE

⚠ WARNING
To avoid personal injury or death:
- **Read and understand this manual before operating the machine.**
- **Do not allow any person other than the operator to ride on the machine.**
- **When operating, keep hands and body inside of the operator station.**
- **Do not touch the control levers and the pedals from outside the operator station while the engine is running.**
- **If the front attachment do not respond to the control lever as expected, stop the engine immediately.**

1. Pilot control lock lever

⚠ WARNING
To avoid personal injury or death:
- **Always pull the pilot control lock lever up to the LOCK position when leaving the operator station.**

NOTE :
- **If the pilot control lock lever is in the UNLOCK position, the engine will not start.**

Do not attempt to start the machine with the pilot control lock lever in the UNLOCK position. If the attempt is made, the following message appears on the display.

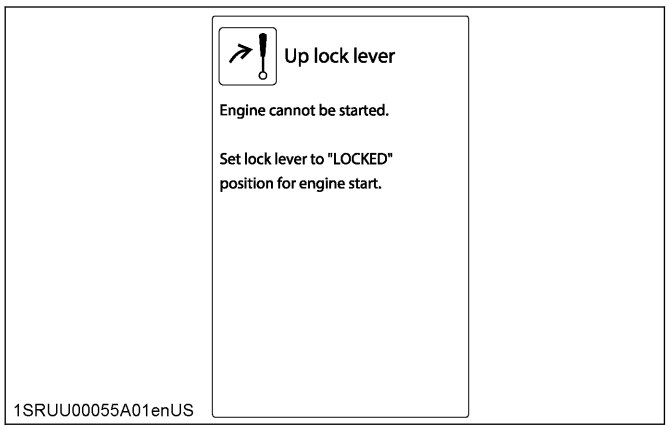

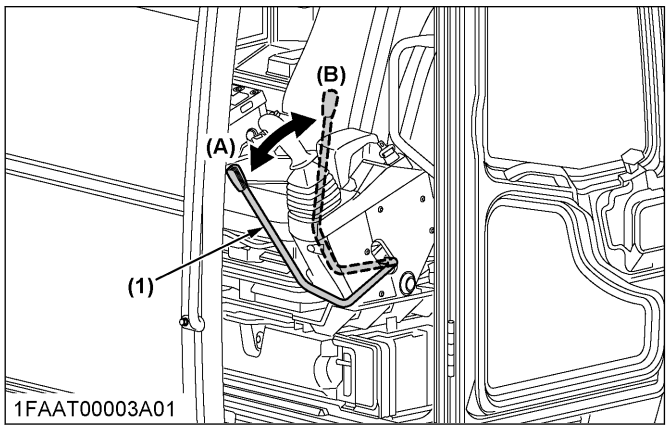

(1) Pilot control lock lever *(A) UNLOCK*
(B) LOCK

DRIVING

⚠ WARNING

To avoid personal injury or death:

- **Before starting the engine, make sure that no one is near the machine.**
- **Before operating the machine, check the track direction (front idler and dozer blade to the front of the machine).**

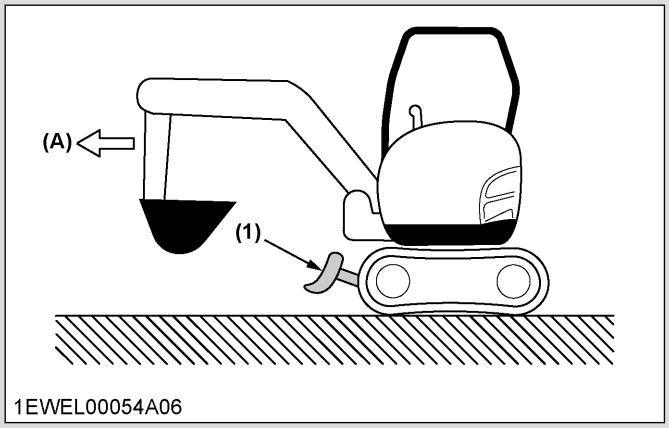

(1) Dozer blade *(A) Front of the machine*

- **Check the ground for stability, and verify whether there are holes or other potential obstacles.**
- **Approach overhangs and edges of ditches carefully as they could cave in.**
- **Use extra caution when traveling across a slope or working sideways on a slope.**

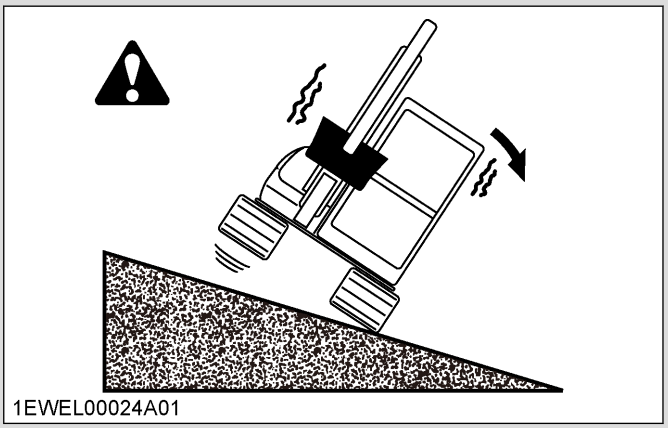

- **The recommended technique for working on a slope:**

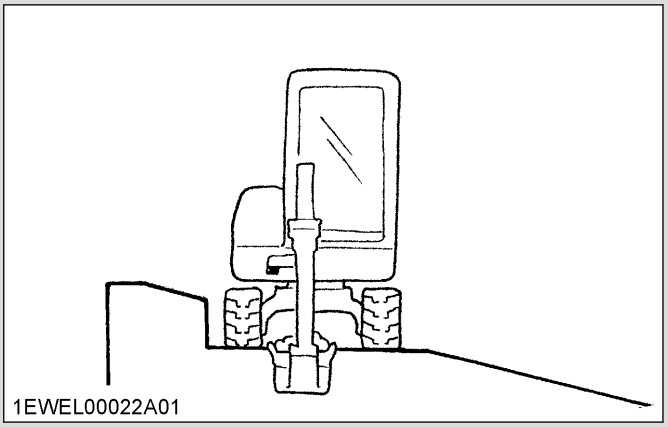

1. Adjust the engine speed from idling to an intermediate speed.

2. Unlock the pilot control lock lever, pull in the bucket and hold the bucket about 20 cm to 40 cm above the ground.

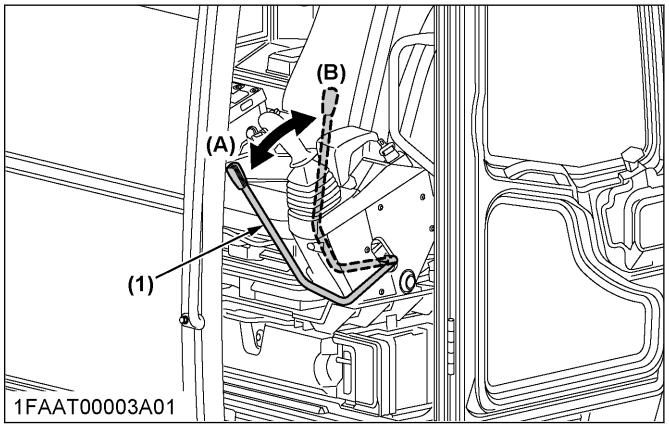

(1) Pilot control lock lever
(A) UNLOCK
(B) LOCK

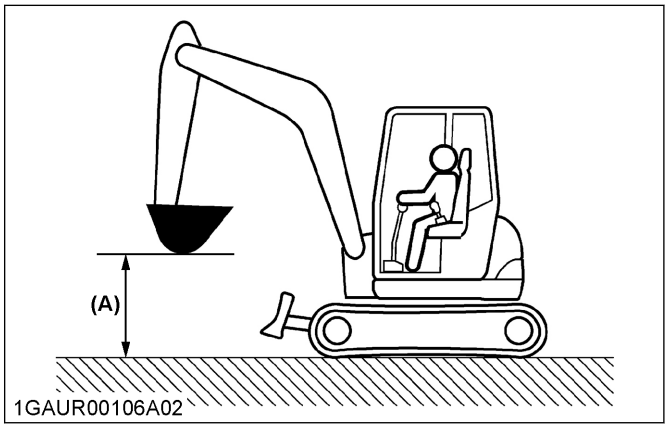

(A) 20 cm to 40 cm

3. Activate the dozer control lever to raise the dozer.

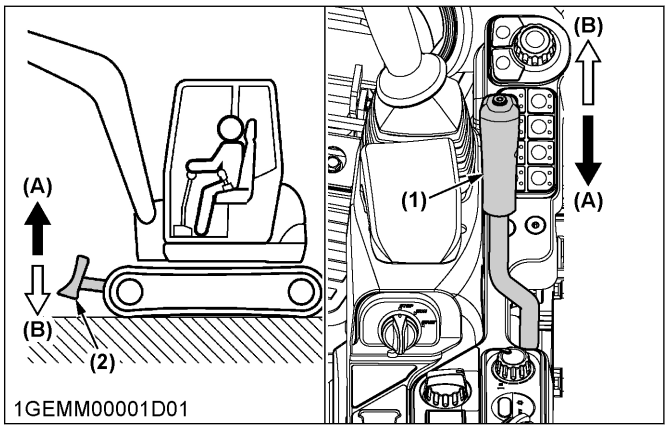

(1) Dozer control lever
(2) Dozer
(A) Raise
(B) Lower

1. Drive levers (right, left)

Pushing the drive levers forward moves the machine forward and vice-versa. The dozer is located at the front of the machine.

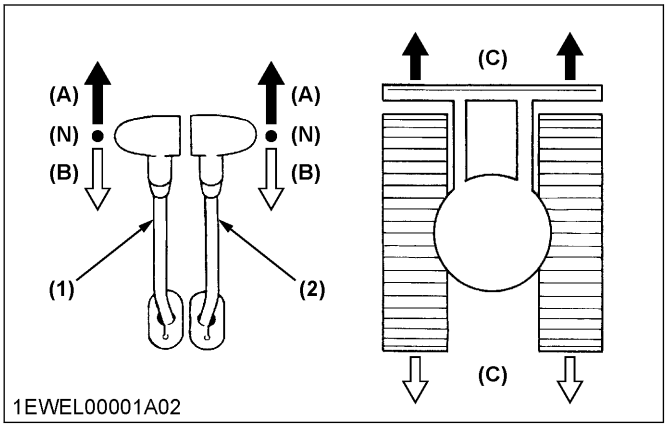

(1) Drive lever (left)
(2) Drive lever (right)
(A) Forward
(B) Backward
(C) Straight
(N) Neutral position

NOTE :

- **When driving the machine, keep the dozer blade in the front. To move the machine forward, move the drive levers to (A). To move in reverse, move the drive levers to (B) with dozer blade in front.**
  If the dozer blade is behind the operator station, then the controls are reversed. Moving the machine forward will require (B) and moving the machine backward will require (A), but this is not recommended.
- **When the machine begins to travel forward or backward, the travel alarm starts sounding.**

TURNS

⚠ WARNING

To avoid personal injury or death:

- **Do not change direction on steep slopes, or the machine could roll over.**
- **Before changing direction, be aware of people and obstacles in the work area.**

1. Pivot turn

NOTE :

- **Movement, as illustrated, is done with the dozer blade in front of the operator.**

Changing direction while traveling

- While traveling forward, bring the left drive lever into the *"NEUTRAL"* position and the machine will turn in the direction of the arrow. See the following illustration.

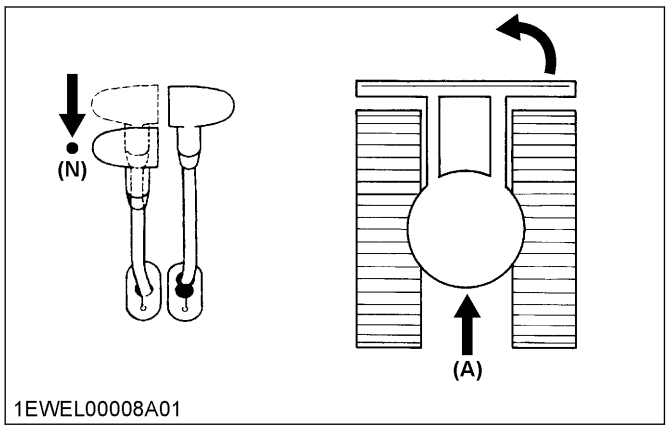

(A) Traveling forward
(N) Neutral position

- While traveling backward, bring the left drive lever into the *"NEUTRAL"* position and the machine will turn in the direction of the arrow. See the following illustration.

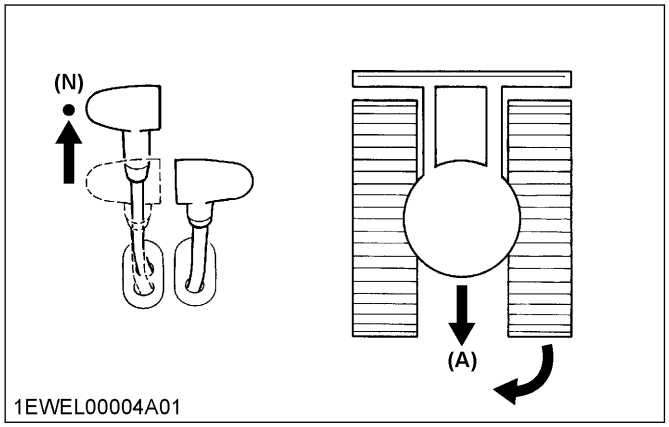

(A) Traveling backward
(N) Neutral position

Changing direction when stationary

- Push the left drive lever forward and the machine will turn in the direction of the arrow. See the following illustration.

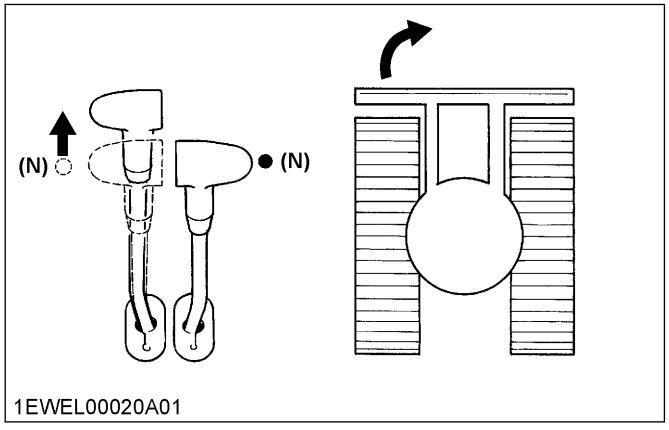

(N) Neutral position

- Pull the left drive lever backward and the machine will turn in the direction of the arrow. See the following illustration.

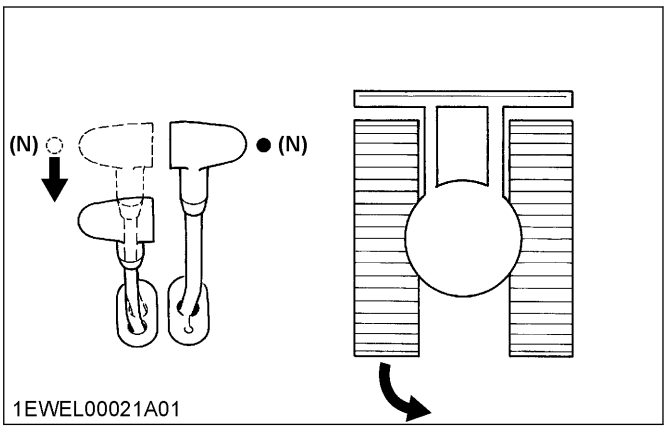

(N) Neutral position

2. Spin turn

When both drive levers are activated in the opposite directions, both tracks will rotate with the same speed but in opposite directions. The center of rotation is the center of the machine.

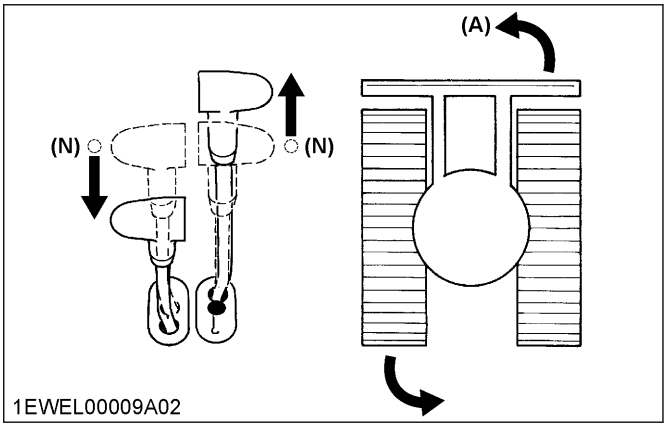

(A) Left spin turn
(N) Neutral position

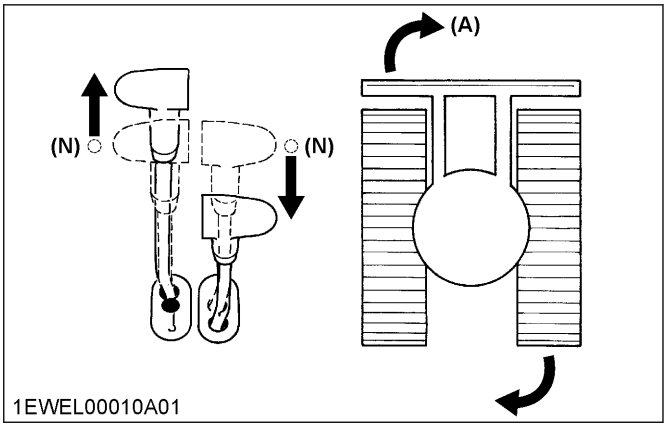

(A) Right spin turn
(N) Neutral position

UP AND DOWNHILL DRIVING

⚠ WARNING

To avoid personal injury or death:

- **When traveling up or down a slope, be extra cautious and observe the following instructions.**

While traveling uphill, keep the lower edge of the bucket approximately 20 cm to 40 cm above the ground. Although the excavator will not slip easily because of the tracks, it is safer to let the bucket slide over the ground while traveling downhill. Always choose a slow speed for uphill and downhill traveling.

Uphill traveling

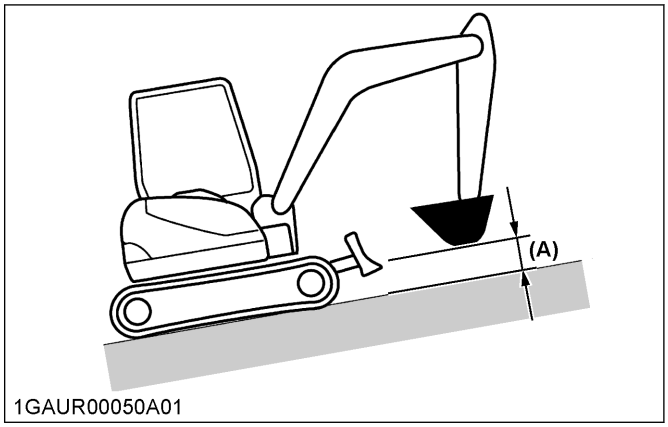

(A) 20 cm to 40 cm

Downhill traveling

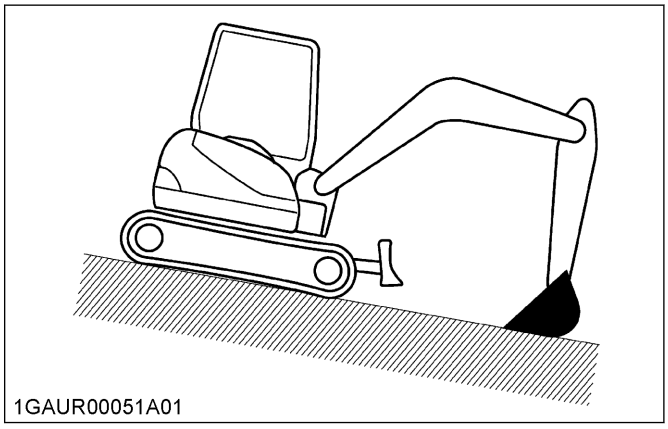

PARKING ON A SLOPE

⚠ WARNING

To avoid personal injury or death:

- **When the machine is parked or left unattended on a slope, put the bucket on the ground and place all control levers in their *"NEUTRAL"* positions, then brace the tracks with chocks.**

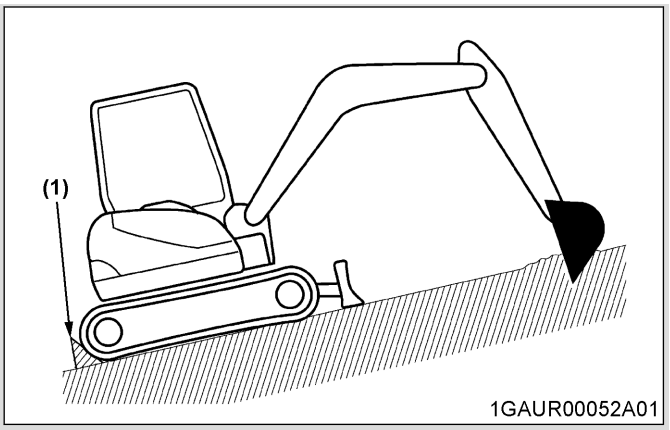

(1) Chock

OPERATING THE DOZER

- Pulling the control lever back raises the dozer.
- Pushing the control lever forward lowers the dozer.
- Pushing the control lever further forward (into the locked position) floats the dozer.

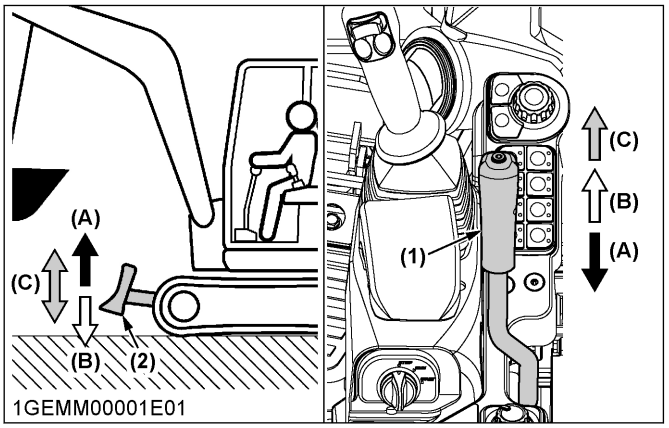

(1) Dozer control lever
(2) Dozer
(A) Raise
(B) Lower
(C) Float (locked position)

- While performing earthmoving work, control both drive levers with the left hand and the dozer control lever with the right hand.

TWO PATTERN SELECTION SYSTEM (TPSS)

- Study control lever pattern A and pattern B and then choose the one which feels most familiar.
- Position the pattern selector lever (located on the right side of operator's seat) in either the lower position (pattern A) or the upper position (pattern B).
- Engage the lever lock to prevent accidental pattern change.
- Familiarize yourself with the pattern selected by operating slowly.

1. Pattern change

1. Pull the pattern selector lever to disengage the lever lock and position the pattern selector lever to the desired position.
2. Engage the lever lock.

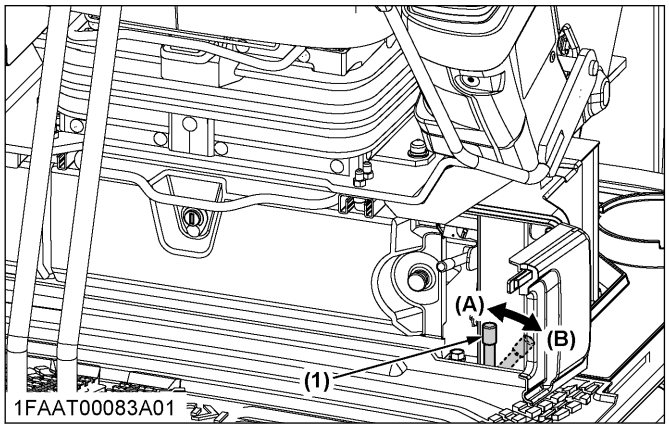

(1) Pattern selector lever (two pattern selection system: TPSS)
(A) Pattern A
(B) Pattern B

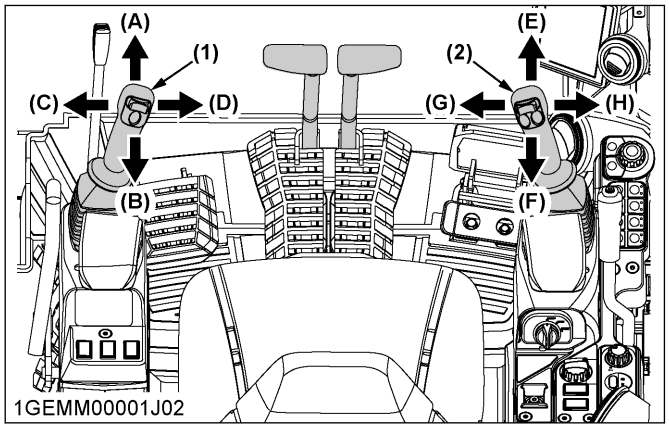

(1) Attachment control lever (left)
(2) Attachment control lever (right)

Lever position		Pattern A	Pattern B
Attachment control lever (left)	(A)	Boom down	Arm up
	(B)	Boom up	Arm crowd
	(C)	Swivel left	Swivel left
	(D)	Swivel right	Swivel right
Attachment control lever (right)	(E)	Arm up	Boom down
	(F)	Arm crowd	Boom up
	(G)	Bucket crowd	Bucket crowd
	(H)	Bucket dump	Bucket dump

OPERATING THE BOOM

To raise the boom, pull the attachment control lever backward.
The boom is equipped with a cushion cylinder which helps prevent excavated material in the bucket from falling out. At low hydraulic oil temperature, for instance after starting the engine in cold weather, the cushioning function will be affected for a short period of time (approximately 3 to 5 seconds). This condition results from the viscosity of the hydraulic oil and is not a sign of malfunction.
The cushion cylinder will operate normally as the oil warms up.
To lower the boom, push the attachment control lever forward.

Pattern A

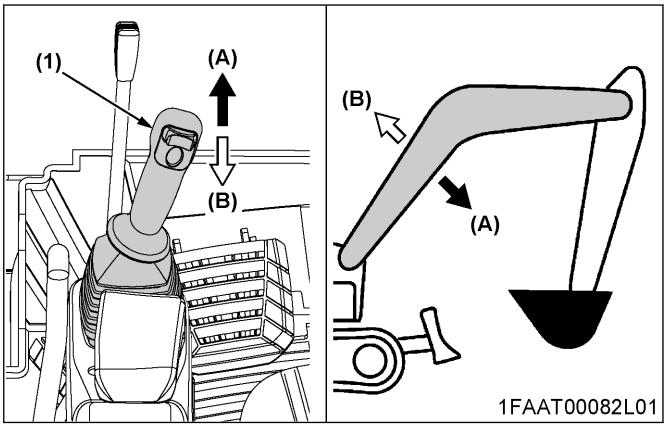

(1) Attachment control lever (left)
(A) Boom down
(B) Boom up

Pattern B

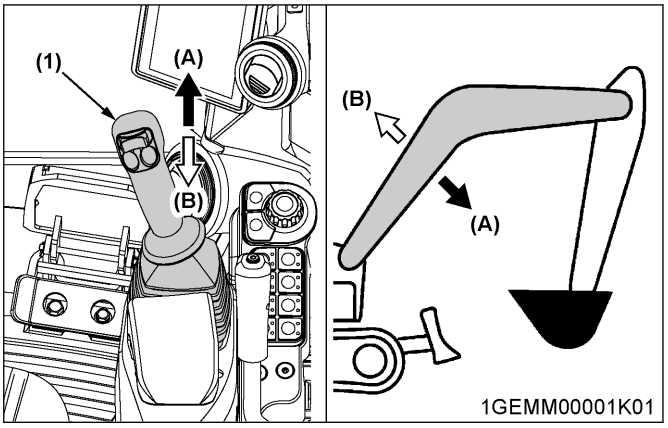

(1) Attachment control lever (right)
(A) Boom down
(B) Boom up

IMPORTANT :

- **When lowering the boom, make sure that it does not hit the dozer and that the bucket teeth do not touch the dozer.**

OPERATION OF THE ARM

- Pulling the attachment control lever back pulls the arm in.
- Pushing the attachment control lever forward moves the arm out.

Pattern A

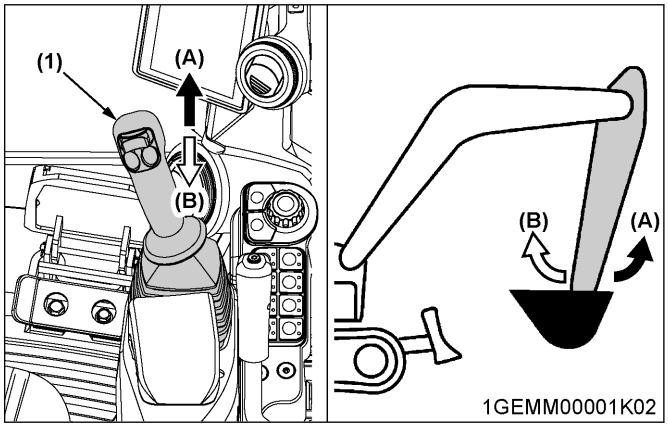

(1) Attachment control lever (right)
(A) Arm out (up)
(B) Arm in (crowd)

Pattern B

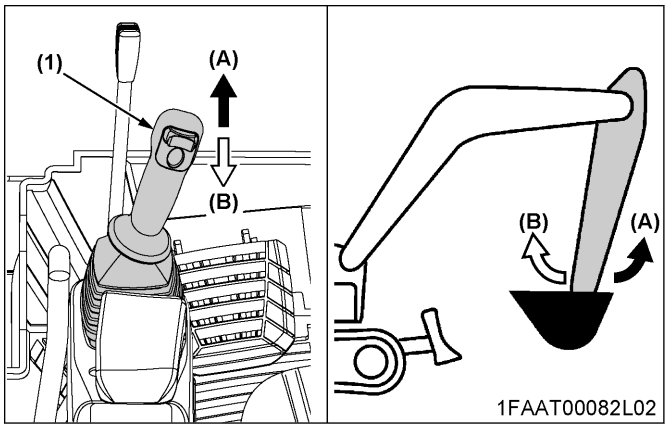

(1) Attachment control lever (left)
(A) Arm out (up)
(B) Arm in (crowd)

NOTE :

- **When pulling in the arm, the movement may stop for a short moment when the arm is in its vertical position. This is caused by the combined load of the arm and bucket moving the cylinder piston away from the hydraulic flow causing a delay in the cylinder action, until the flow catches up with cylinder piston. This is a characteristic of the hydraulic system and is not a sign of a malfunction.**

OPERATION OF THE BUCKET

- To dig using the bucket, move the right attachment control lever left from the *"NEUTRAL"* position.
- Moving the control lever right moves the bucket outwards and empties its contents.

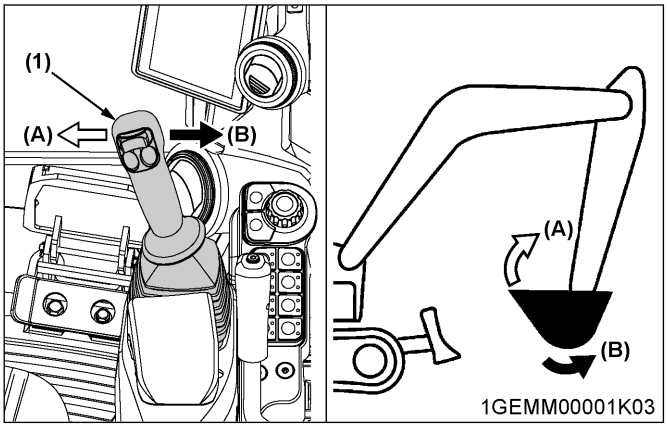

(1) Attachment control lever (right)
(A) Bucket crowd
(B) Bucket dump

SWIVEL AND BOOM SWING OPERATION

⚠ WARNING

To avoid personal injury or death:

- **When working in groups, always let others know what you are going to do before you do it.**
- **Keep others away from the machine working area.**
- **Lock the boom swing pedal when the boom swing function is not used.**

1. Swivel operation

IMPORTANT :

- **Do not operate the left attachment control lever abruptly from right to left (or vice versa). This causes high impact loading on the swivel gear and the swivel motor, shortening the life of the machine.**

- Move the control lever to the left and the upper structure will turn to the left.
- Move the control lever to the right and the upper structure will turn to the right.

Swivel

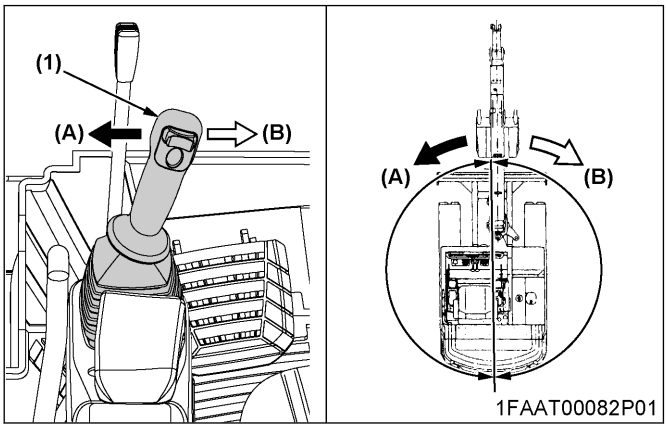

(1) Attachment control lever (left)
(A) Swivel left
(B) Swivel right

2. Boom swing operation

1. Flip the pedal lock up to unlock the pedal.
2. Operate the boom swing as follows:
   - Step on the left side of the pedal to swing the boom to the left.
   - Step on the right side of the pedal to swing the boom to the right.

Boom swing

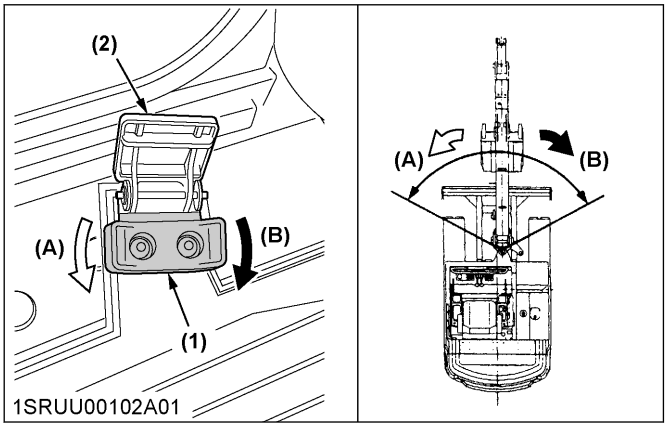

(1) Boom swing pedal
(2) Pedal lock
(A) Swing left
(B) Swing right

AUXILIARY PORT OPERATION

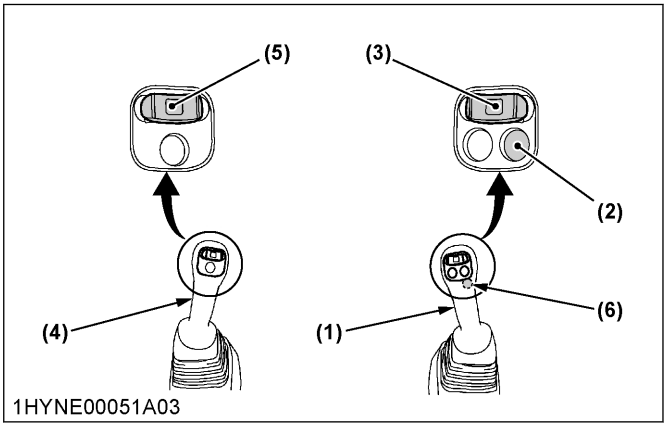

(1) Attachment control lever (right)
(2) AUX port enable switch
(3) AUX 1 port rocker switch (right)
(4) Attachment control lever (left)
(5) AUX 2 port rocker switch (left)
(6) One-way hold switch

The AUX port enable switch is used to operate hydraulic attachments such as hammers.

1. Selecting operation modes

The AUX port has been factory-set to 2 operation modes. You can select one of them. Up to 5 operation modes can be preset.
(See Setting the maximum flow volume on page 77.)

1. Press the menu switch to make the menu bar appear on the display.
2. Rotate the jog dial to the right to select "AUX setting", and press the jog dial.

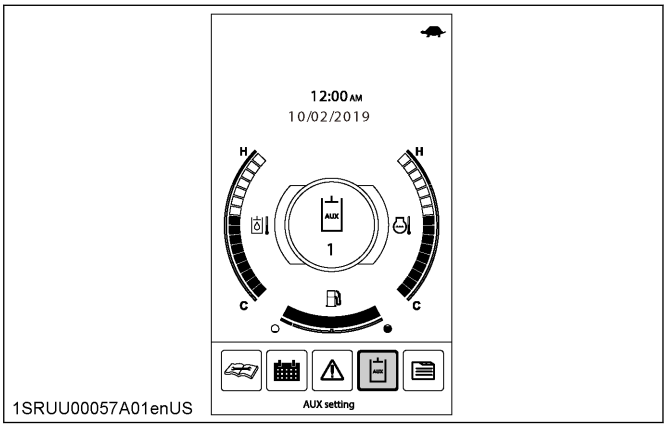

3. Rotate the jog dial to the right to select "`Mode select`", and press the jog dial.

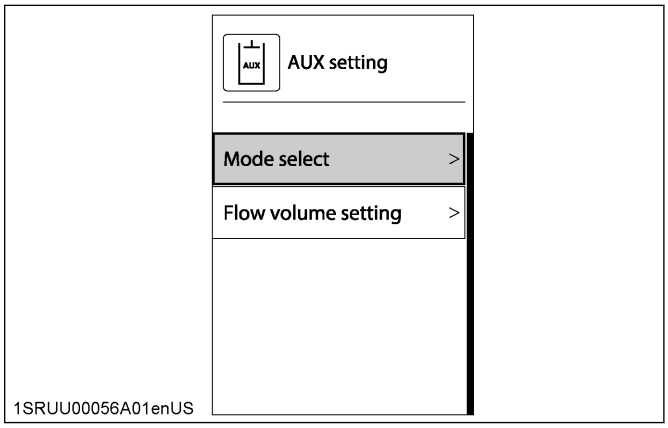

4. Rotate the jog dial to the right to select the desired mode, and press the jog dial to confirm the selection.
   The following illustrations and tables show the factory default settings.

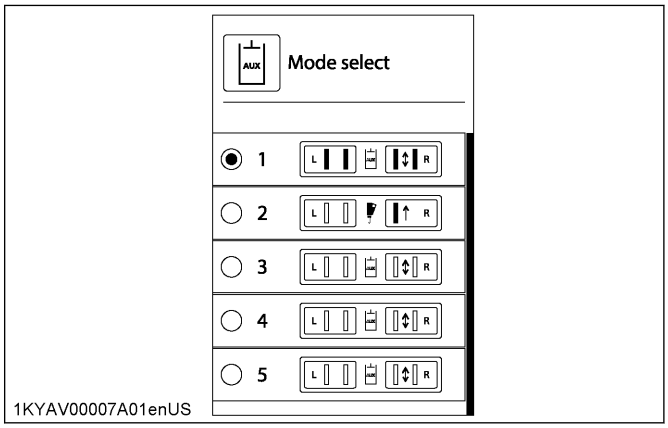

Mode	AUX 2 port flow volume	Icon	AUX 1 port flow volume
			One-way or two-way circuit selection valve
1	Maximum flow volume	AUX (standard)	Maximum flow volume
			two-way
2	No activation	Breaker	One-way flow (Send oil to port 2 only)
			one-way
3	No activation	AUX (standard)	No activation
			two-way
4	No activation	AUX (standard)	No activation
			two-way
5	No activation	AUX (standard)	No activation
			two-way

NOTE :

- **When turning the starter switch to the [RUN] position, the operation mode will return to the last operation mode used.**

2. Operating the AUX port

1. Turn the starter switch to the **[RUN]** position.
   Let the engine warm up after start-up for approximately 10 minutes under no load conditions.

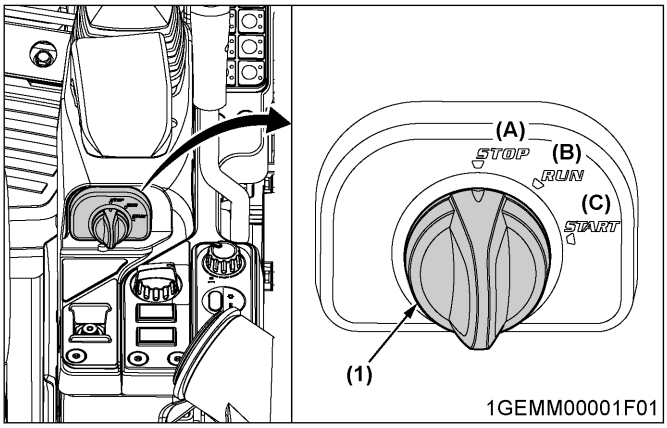

(1) Starter switch

(A) STOP
(B) RUN
(C) START

2. Lower the pilot control lock lever to the UNLOCK position.

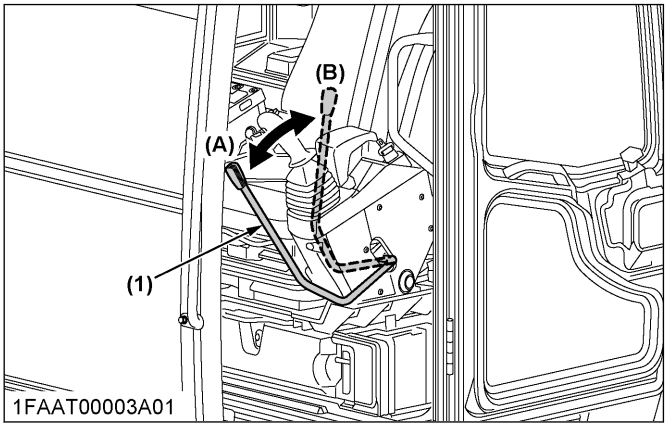

(1) Pilot control lock lever

(A) UNLOCK
(B) LOCK

3. Push the AUX port enable switch.

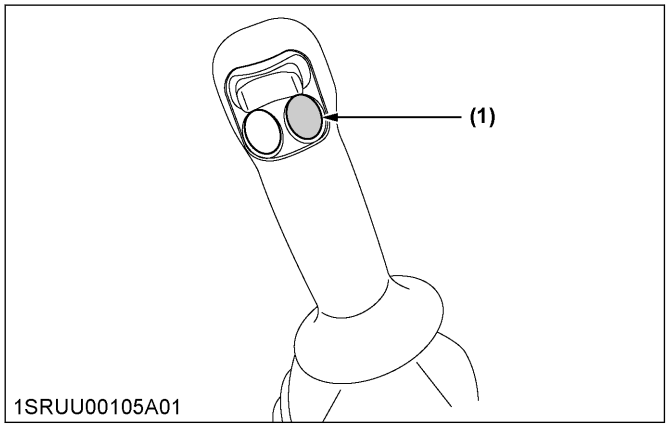

(1) AUX port enable switch

NOTE :

- **If the pilot control lock lever is at the LOCK position, the following message appears on-screen. Push down this lever to the UNLOCK position and then press the AUX port enable switch.**

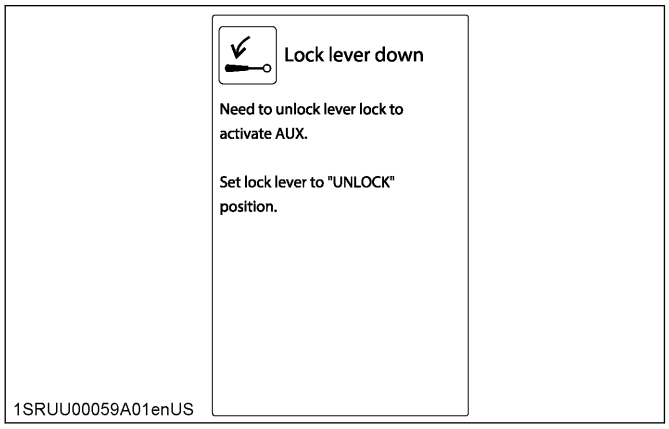

4. Operate the AUX port rocker switch as follows:
   - Move the AUX port rocker switch of the attachment control lever (right) to the right to send oil to the AUX port 1.
   - Move the AUX port rocker switch of the attachment control lever (right) to the left to send oil to the AUX port 2.
   - Move the AUX port rocker switch of the attachment control lever (left) to the right to send oil to the AUX port 3.
   - Move the AUX port rocker switch of the attachment control lever (left) to the left to send oil to the AUX port 4.

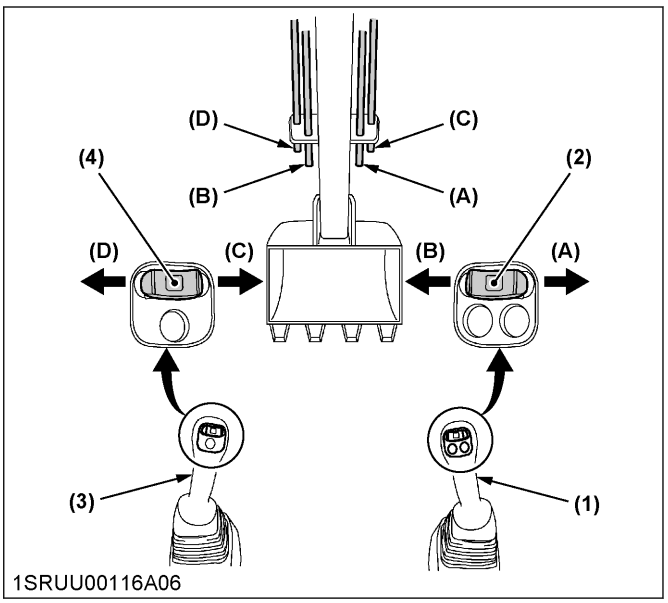

(1) Attachment control lever (right)
(2) AUX 1 port rocker switch (right)
(3) Attachment control lever (left)
(4) AUX 2 port rocker switch (left)
(A) AUX port 1 (AUX 1)
(B) AUX port 2 (AUX 1)
(C) AUX port 3 (AUX 2)
(D) AUX port 4 (AUX 2)

IMPORTANT :

- **Proportional control of the AUX port rocker switch allows for slow-to-fast movement of the attachment.**
  For example, if you move the AUX port rocker switch halfway, the attachment will move at approximately one-half speed.

NOTE :

- **Only when the auxiliary port function is enabled, the rocker switch allows the oil to flow towards the auxiliary port. If this function is disabled, no oil flows towards the auxiliary port, and the message "`Enable AUX port`" appears on-screen.**
  To enable this function, press the AUX port enable switch.

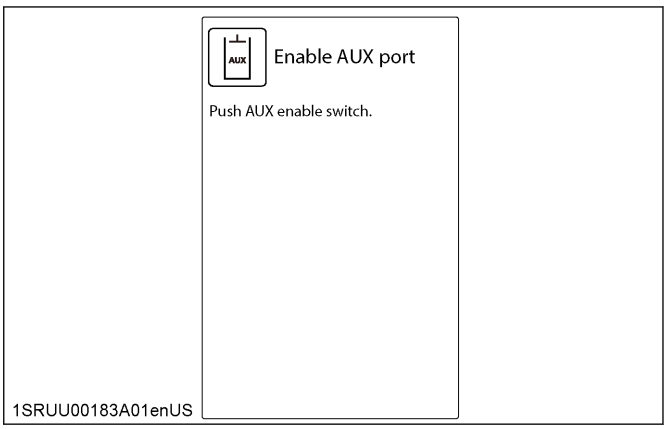

2.1 One-way hold

⚠ DANGER

To avoid serious injury or death:

- **Before using the one-way hold switch, make sure that nobody is in the working area.**
  The attachment can move in a sudden manner.
- **Before using the one-way hold switch, check that the accessory is suitable for use with continuous oil flows.**
  Use of this function on an accessory that is not suitable for use with continues oil flow may cause injury or damage the machine or accessory.
- **Always adapt the flow volume of the auxiliary port to the accessory.**
  The auxiliary port cannot be operated proportionally with the one-way hold switch.
  The flow volume is adjusted to the highest level from the factory.

Press the one way hold switch of the right attachment control lever, and the oil continues to flow through the AUX port 2. Press this switch again or move the AUX port rocker switch, and the oil flow is interrupted.

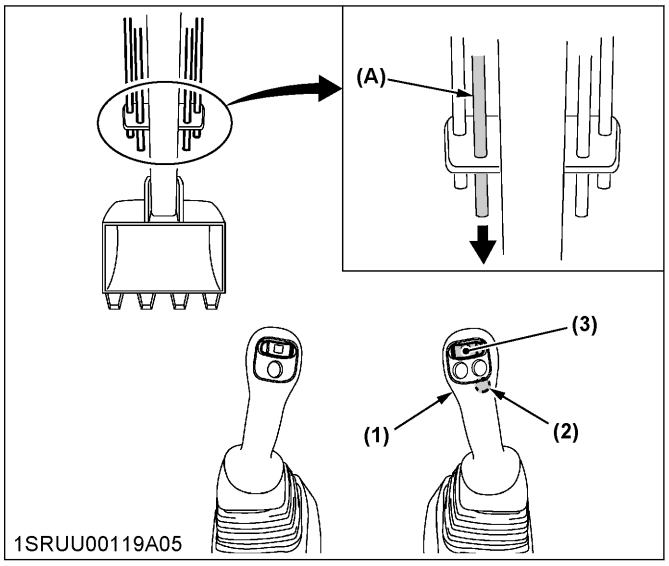

(1) Attachment control lever (right)
(2) One-way hold switch
(3) AUX 1 port rocker switch (right)
(A) AUX port 2 (AUX 1)

NOTE :

- **Even if the one-way hold switch of the attachment control lever (left) is pressed, no function is assigned. In such a case, the following message appears on-screen.**

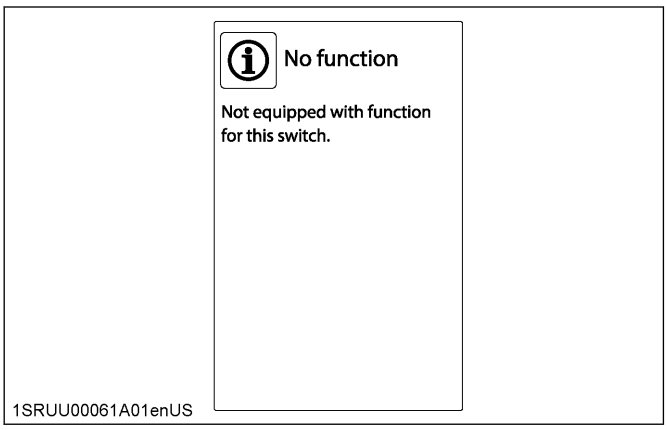

3. Maximum flow volume

The AUX port has been factory-set to 2 operation modes. Additional modes can also be preset.

3.1 Setting the maximum flow volume

IMPORTANT :

- **When the AUX port is not used for a long period of time, dirt particles can settle in the lower part of the AUX port lines. When the plugs on the AUX port lines are removed to connect attachments, drain approximately 100 cc of oil before making connections.**

NOTE :

- **If the same implement is attached to a different machine, the working speed may differ, even when using identical flow rate settings. For each machine, it is important to individually adjust the flow rate settings. Upon changing the implement, you need to determine and adjust the optimum flow rates for the new implement.**
- **The flow at the AUX port is not constant when using a different function or if a relief valve is responding.**
- **It is recommended to adjust this setting during the operation of the implement.**

1. With the starter switch at the **[RUN]** position, press the menu switch.

2. Rotate the jog dial to the right, select "AUX setting", and press the jog dial.

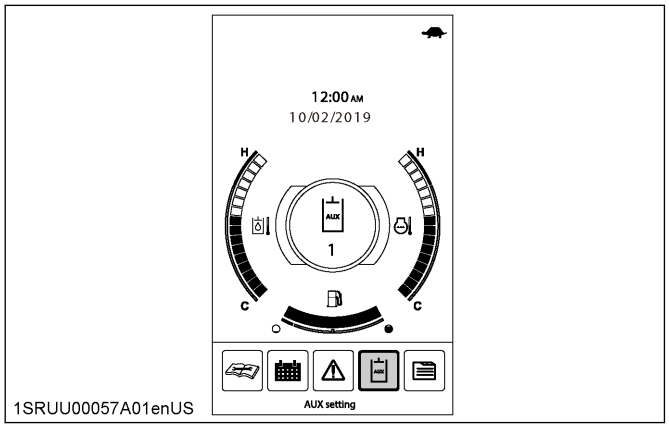

3. Rotate the jog dial to the right to select "Flow volume setting", and press the jog dial.

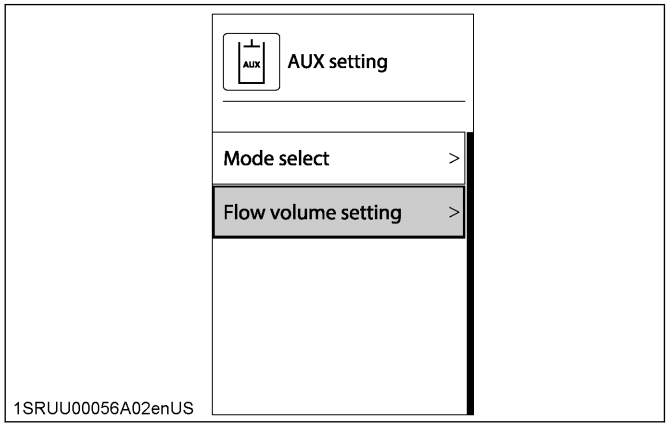

4. Rotate the jog dial to the right to select the desired mode, and press the jog dial.

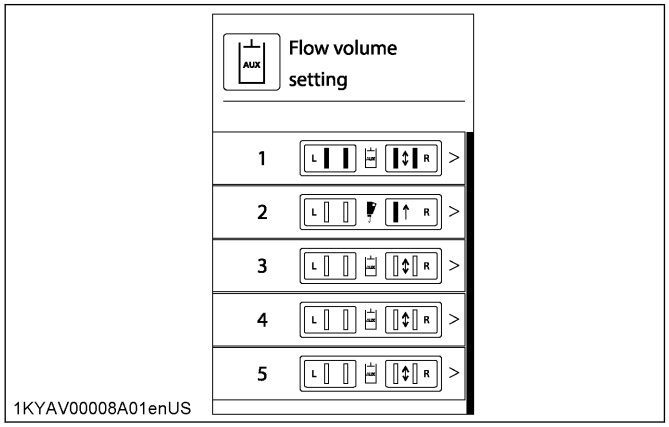

5. Set the icons as follows:
   a. Rotate jog dial to the right or left until the icon is selected, and press the jog dial.

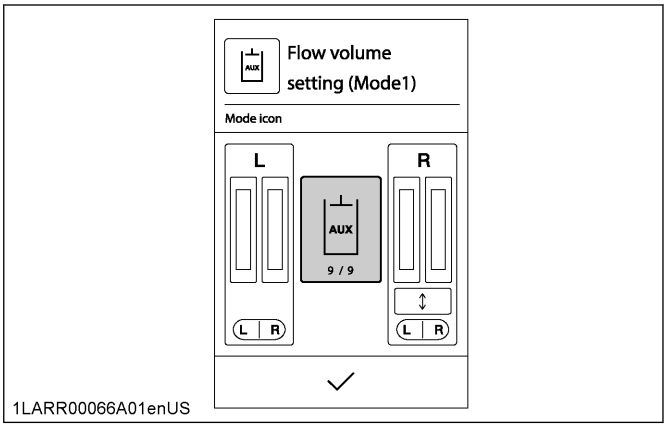

   b. Rotate jog dial to the right or left until the desired icon is selected, and press the jog dial to confirm.

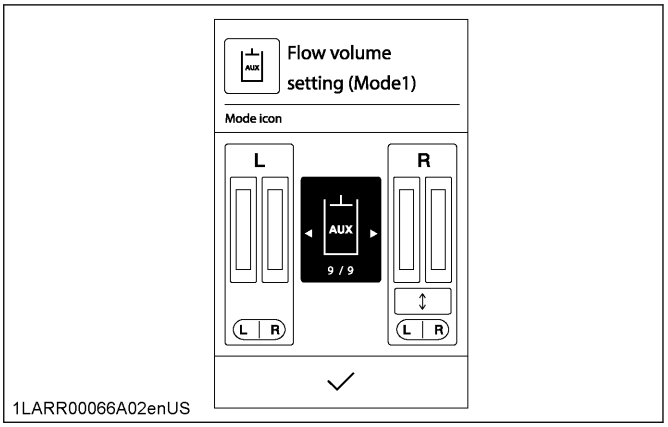

Types of AUX icons

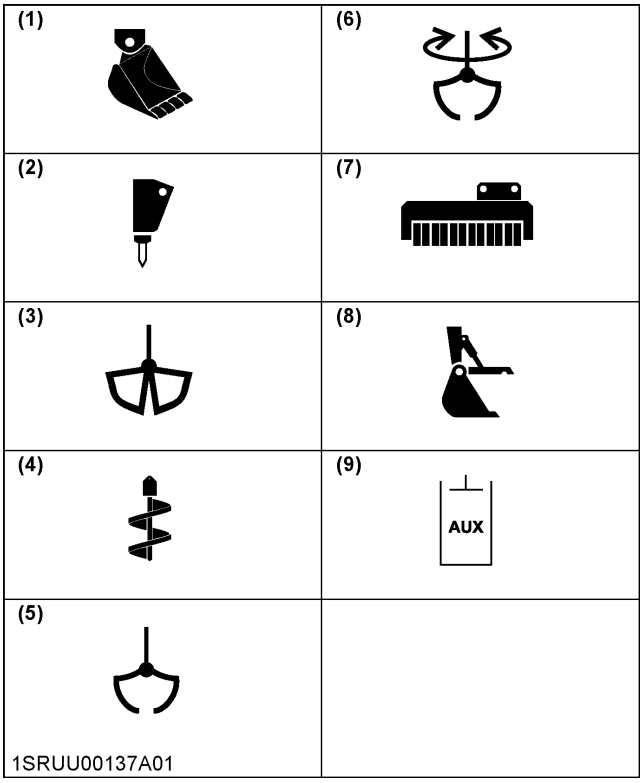

(1) Tilt bucket
(2) Breaker
(3) Clamshell
(4) Auger
(5) Grapple
(6) Rotary grapple
(7) Brush cutter
(8) Thumb grapple
(9) AUX (standard)

NOTE :

- **There is no relationship between the icons and the flow control settings. Select icons to suit the images of the attachments to be connected.**

6. Set the maximum flow volume for each AUX port as follows:
   a. Rotate jog dial to the right or left until the desired bar graph is selected, and press the jog dial.

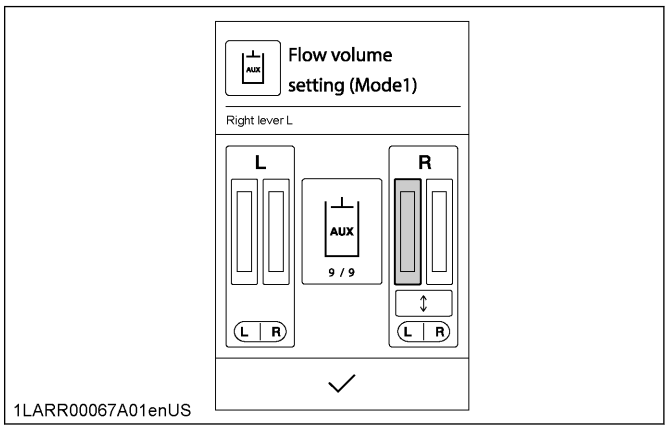

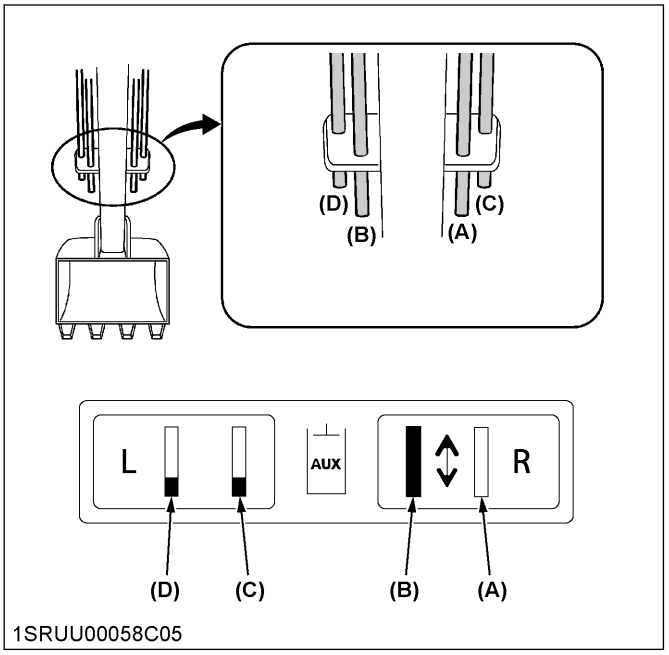

(A) AUX port 1 (AUX 1)
(B) AUX port 2 (AUX 1)
(C) AUX port 3 (AUX 2)
(D) AUX port 4 (AUX 2)

   b. Rotate the jog dial to the right or left to set the bar graph to the desired level, and press the jog dial to confirm the selection.

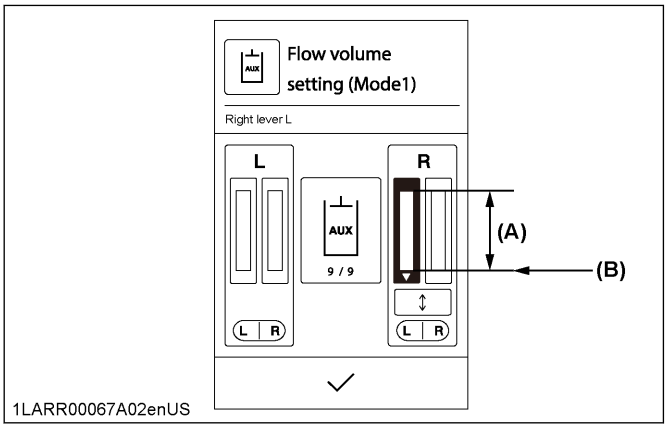

(A) MAX. flow volume
(B) Output interrupted

AUX port maximum flow volume

	AUX 2 port	AUX 1 port
Maximum flow volume (theoretical) L/min	55.8	100
Maximum pressure MPa (kgf/cm^2)	20.6 (210)	

   c. Repeat the process for each AUX port.

NOTE :

- **Some attachments might not be activated even when the bar level is still above the lowest position. Even when**

the bars of ports 1 and 2 (or of ports 3 and 4) are at the same level, the same speed might not be achieved. This does not indicate a machine problem. Readjust the bar to the optimum level according to your attachment manual.

- **Suppose that the same attachment is mounted on another machine. Even if the same flow control setting is made, the same speed cannot be achieved. Make an optimum setting on each machine.**

7. Set the one-way or two-way circuit selection valve as follows:
   a. Rotate jog dial to the right or left to select the one-way or two-way circuit selection valve, and press the jog dial.

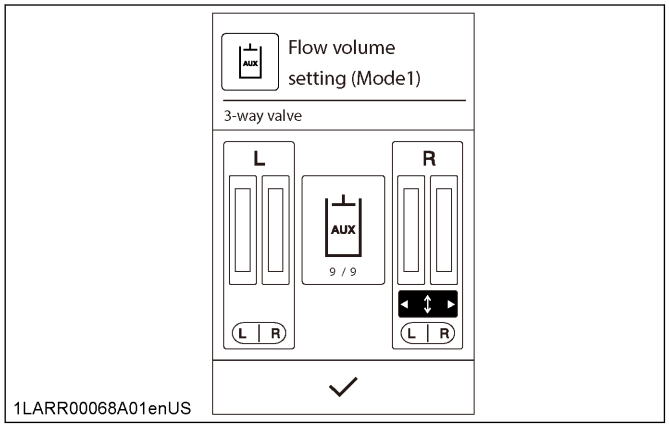

   b. Rotate jog dial to the right or left to select the desired setting, and press the jog dial.

Valve	Two-way	One-way
Icon	↕	↑

8. Rotate jog dial to the right to select the *"✔"* and press the jog dial to save the input, or press the return switch to cancel.

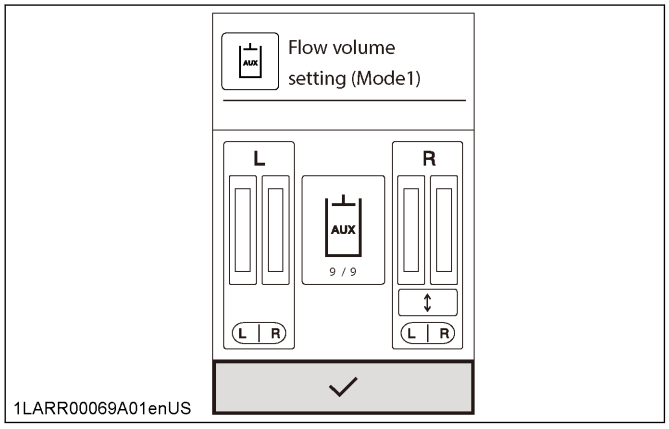

RELEASING PRESSURE TRAPPED IN THE HYDRAULIC SYSTEM

⚠ WARNING

To avoid personal injury or death:

- **Relieve residual hydraulic pressure immediately after the engine has stopped.**

1. Lower the attachments and the dozer blade down to the ground.
2. Turn the starter switch to the **[STOP]** position and shut off the engine.
3. After stopping the engine, turn the starter switch to the **[RUN]** position.
4. Set the pilot control lock lever to the UNLOCK position.

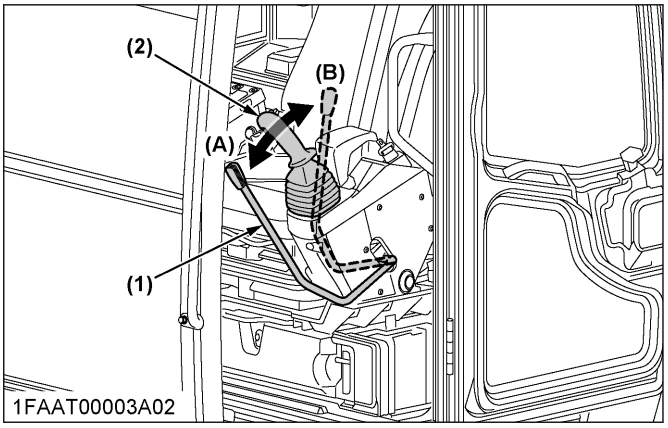

(1) Pilot control lock lever
(2) Attachment control lever (left)
(A) UNLOCK
(B) LOCK

5. Move the operating lever to release pressure from the hydraulic system.

1. Releasing pressure trapped in the AUX port

1. Release the pressure trapped in the hydraulic system.
   (See RELEASING PRESSURE TRAPPED IN THE HYDRAULIC SYSTEM on page 80.)

2. Press the AUX port enable switch.

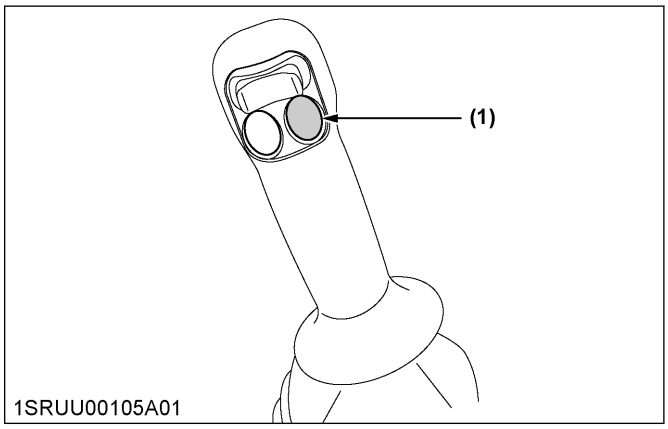

(1) AUX port enable switch

3. Make sure that the flow volume in all the AUX ports is not minimized.
   If the pressure is removed after minimizing the flow volume in the AUX port, the pressure will not be released completely and the hose coupler may be unable to connect and disconnect.

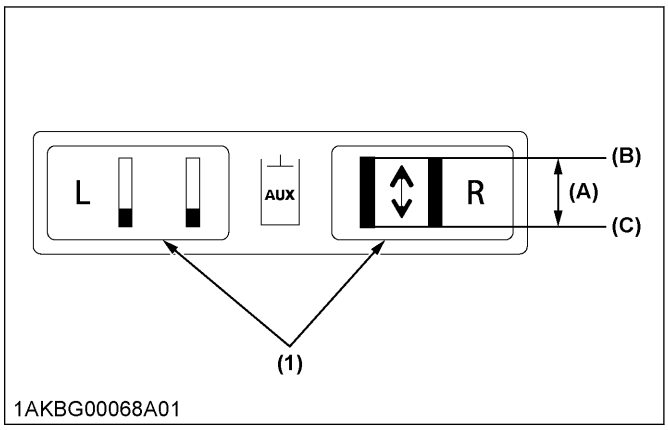

(1) Flow volume in AUX port display
(A) Flow volume in AUX port
(B) Maximum
(C) Minimum

4. Move the AUX port rocker switch mounted to the operating lever to the right to release pressure in the AUX port.

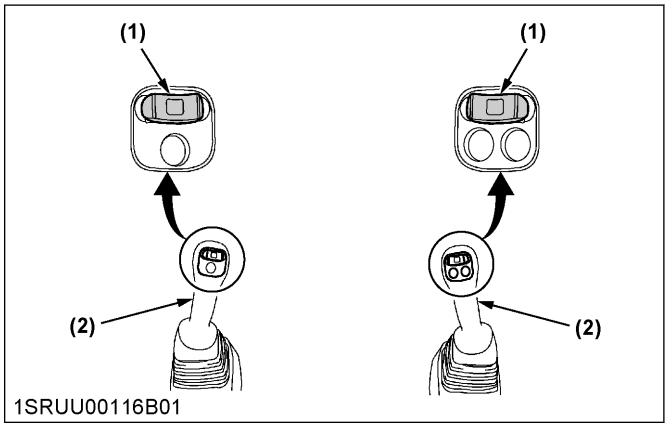

(1) AUX port rocker switch
(2) Attachment control lever

ONE-WAY OR TWO-WAY CIRCUIT SELECTION VALVE OPERATION

⚠ WARNING
To avoid personal injury or death:
- **Stop the engine before removing or changing the equipment.**
- **Release the pressure from the hydraulic system before removing or changing the equipment. (See RELEASING PRESSURE TRAPPED IN THE HYDRAULIC SYSTEM on page 80.)**
- **Move the selection valve to the correct position (either one-way or two-way circuit selection) before mounting the equipment.**
- **Always select the correct valve position before mounting the equipment (one-way or two-way circuit selection) to avoid sudden movement of the equipment.**

NOTE :
- **Leaving the selection valve to one-way circuit selection and attaching two-way circuit equipment may cause the equipment to move (drop) suddenly due to its own weight, as the tank line remains open even with the engine off.**

The one-way or two-way selection valve is linked to the AUX operating mode. There is no need to control it in manual mode.
(See Setting the maximum flow volume on page 77.)
Change the AUX operating mode setting, depending on the action of the attachment being used (rotary or breaking).

Example

1-way circuit	Hammer, and so on.
2-way circuit	Thumb grapple, tilt bucket, auger, grapple, and so on.

OPERATING THE BOOM LOWERING VALVE

Use this valve if the engine fails to start and the accumulator fails to operate and there is an urgent need to lower the boom.

⚠ WARNING
To avoid personal injury or death:
- **When the engine functions, move the control lever to lower the boom. Never use the boom lowering valve.**
- **Loosen the boom lowering valve set screw slowly a quarter turn at a time. Be careful not to**

loosen it a full turn or more at once because otherwise oil may squirt out accidentally.
- **Before starting this job, make sure there is nobody below the boom.**

1. Open the fuel tank cover.
2. Loosen the nut mounted on the boom section of the control valve first, and then loosen the set screw slowly.

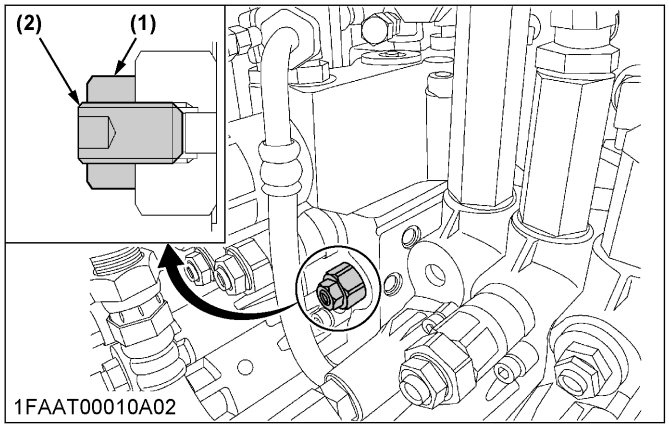

(1) Nut
(2) Set screw

3. After this operation, tighten the nut and the set screw in place.

AUTO IDLE (AI) OPERATION

Throttle potentiometer
With this potentiometer, the operator can adjust the engine speed when the Auto Idle control is activated.

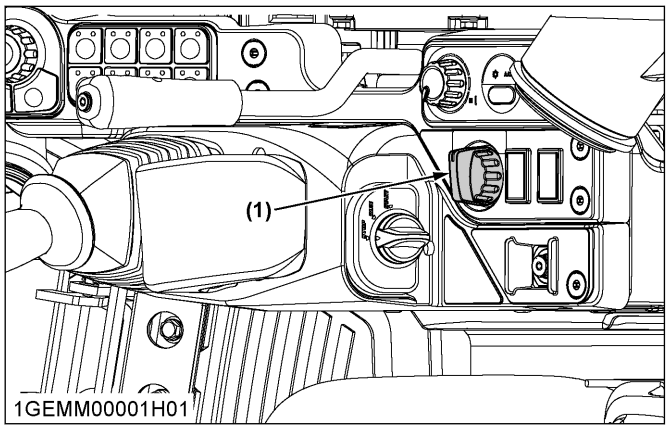

(1) Throttle potentiometer

Auto Idle (AI) control switch
With this switch, the Auto Idle control and the engine auto-stop control can be turned on and off.

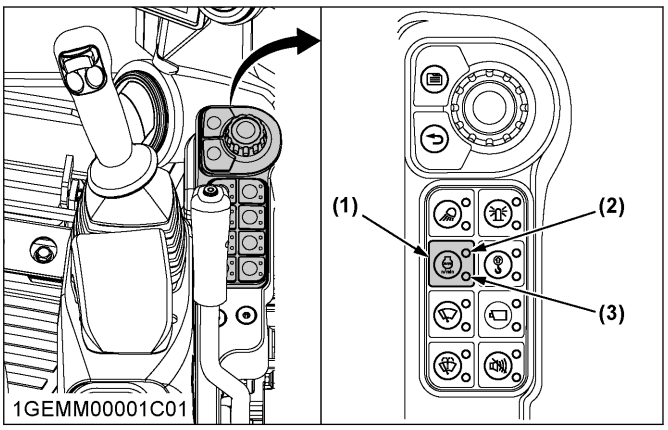

(1) Auto Idle control switch
(2) Upper indicator
(3) Lower indicator

Auto Idle (AI) control
The Auto Idle control causes the engine speed to drop to idle speed when the control levers are left in neutral for longer than four seconds. If the controls are activated, the engine speed rises immediately to the preset rpm. If the Auto Idle is not activated, the throttle potentiometer can be utilized to control the engine speed in a similar way to a conventional throttle control lever.

Engine auto-stop control
The engine auto-stop control automatically stops the engine when no operation is performed for a preset period of time while idling. 30 seconds before the engine stops, the message "`After 30 sec. engine stops`" appears on the display.
After the engine stops, the following message appears on the display.

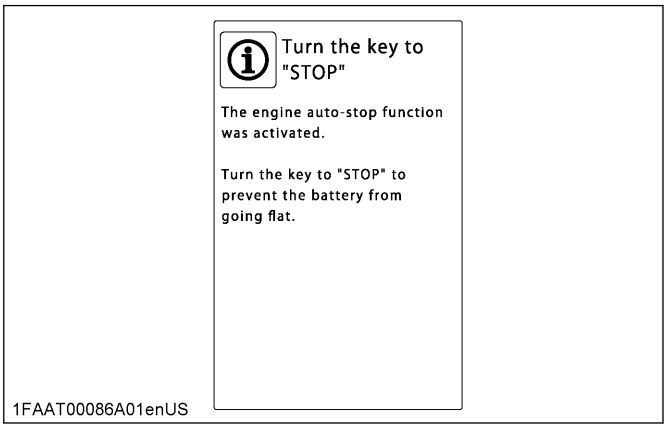

In order to restart the engine, turn the starter switch to the **[STOP]** position, and then start the engine as normal.
3 minutes after the engine stops, the electrical equipment turns off.

NOTE :
- **During the 3 minutes before the electrical equipment turns off, only the working light can be used.**

The engine auto-stop function only activates after the preset time period when all of the following conditions have been met:
- The engine is running.
- The attachment control lock lever is locked.
- The display and keypad switch are not in use.
- The machine is not overheated.
- The engine is not preheating.
- The overload warning system is not activated.
- The Diesel Particulate Filter (DPF) is not regenerating.

⚠ CAUTION

To avoid personal injury:
- **When operating in confined spaces or when loading onto a vehicle, turn off the Auto Idle control switch (lamp off). This is to prevent unwanted engine speed increase when control levers are activated.**

IMPORTANT :
- **It is possible that the Auto Idle may not function until hydraulic oil warms up in cold weather. Therefore, it is not recommended to activate Auto Idle until the machine has completely warmed up.**

NOTE :
- **Before operating the control lever, check the Auto Idle lamp.**
- **The Auto Idle control, when selected by a switch, provides the operator with a way to control the engine speed without moving the throttle potentiometer. This is done simply by not activating any control levers for about 4 seconds after stopping work, and then to simply restore a preset (by potentiometer) engine speed, activate any control lever to return to work.**
- **The purpose of the system is to reduce fuel consumption, noise and operator fatigue.**

IMPORTANT INFORMATION ON MACHINE OPERATION

- Do not crush concrete or boulders using side swings with the bucket. Also, avoid using side sweeps of the bucket to move earth piles.
- Under all circumstances, avoid the following operations:
  - Excavation using the gravitational impact of the machine.
  - Compacting of gravel or soil using the dropping action of the bucket.
  - Excavation using the traveling power of the machine.
- If soil adheres to the bucket, do not try to violently shake off the soil. This can cause damage to the machine. Instead, use the following technique:
  Shake off adhering soil when the bucket is being emptied by moving the bucket out to the maximum stroke of the cylinder. Should this not suffice, swing out the arm as far as possible and operate the bucket back and forth.
- Do not hit the dozer with the boom cylinder.
  Make sure that the boom cylinder does not hit the dozer when doing deep excavations. If necessary, swivel around so that the dozer is at the back of the machine.
- Pay attention when pulling in the bucket.
  When pulling in the bucket (for driving or transportation), avoid hitting the dozer.
- Avoid collisions with obstructions.
  When moving the machine, pay attention that the dozer does not collide with obstructions such as boulders, and so on.
- Support the machine correctly.
  When stabilizing the machine with the dozer, lower the dozer to engage the full width on the ground.
- If the water or mud level reaches higher than the top of the tracks, the swivel bearing, swivel motor gear and ring gear may be exposed to mud, water and other foreign objects.
  The machine must be properly pressure washed after each use.
  - Thoroughly clean the area around the swivel bearing, swivel motor gear and ring gear to remove foreign objects.
  - Inspect the swivel motor oil sump (if equipped) for water contamination. If water is present, refer to operator's manual for lubricant replacement procedure.
  - Refer to operator's manual for proper swivel bearing, swivel motor gear and ring gear lubrication procedures.
  - Reinstall any protective coverings if removed earlier.
- Avoid applying excessive load with the cylinders fully extended, as doing so can easily damage the machine.
- When relieving the residual pressure, do so immediately after the engine has stopped.

TRANSPORTING THE MACHINE

⚠ DANGER

To avoid serious injury or death:

- **Do not change directions when the machine is on a ramp. If a change of direction is necessary, drive off the ramp completely and make the turn.**

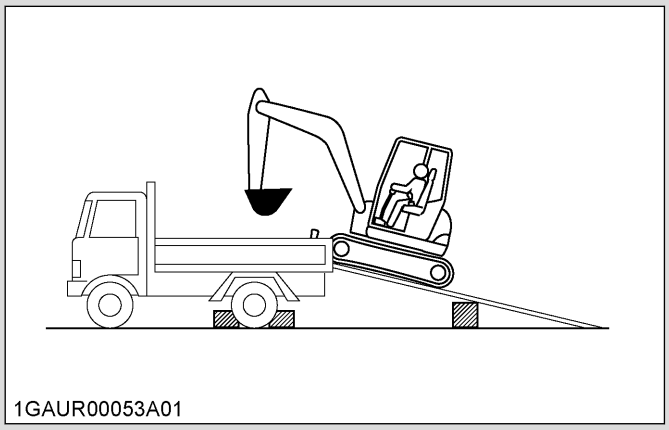

1GAUR00053A01

- **When the machine reaches the point between the ramp and the bed, halt and then move very slowly until the machine reaches the horizontal position.**
- **Move the machine onto the vehicle only with the arm completely pulled in.**
- **Do not jack up the machine using its boom to load or unload the machine from the vehicle. Doing this is dangerous, as the CAB of the vehicle could be damaged when swiveling around the upper body.**
- **Make sure the ramps are of sufficient capacity and securely connected to the vehicle to support the machine safely throughout the loading or unloading operation.**

IMPORTANT :

- **When driving forward or backward onto the vehicle, or when swiveling the upper body, make sure that neither the CAB nor the gates of the vehicle are damaged.**

TRANSPORTING ON A TRUCK

⚠ WARNING

To avoid personal injury or death:

- **After loading the machine on the truck, lower the bucket and dozer onto the truck bed.**

IMPORTANT :

- **Turn the auto idle control switch *"OFF"* (lamp off) while loading or unloading the excavator from the vehicle.**
- **Turn the travel speed switch *"OFF"* (*"LOWSPEED"*) (speed indicator light changes from the symbol to the symbol) while loading or unloading the excavator from the vehicle.**

Prepare a platform to load or unload the machine. Take the following steps when using a ramp.

1. Apply the parking brakes of the vehicle and block the drive wheels from both sides.

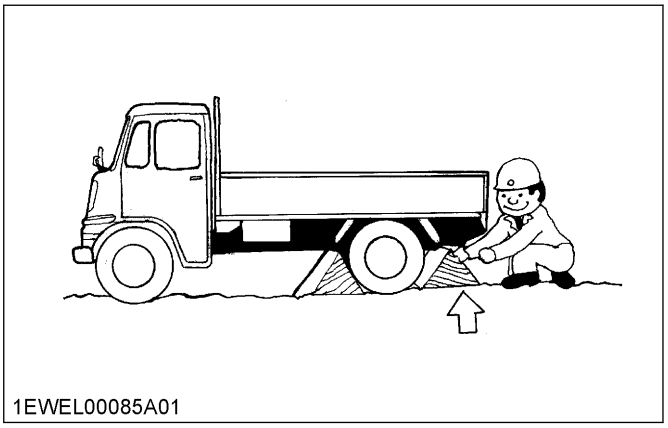

1EWEL00085A01

2. Use mounting brackets to secure the ramp properly. Connect the ramp directly with the bed.

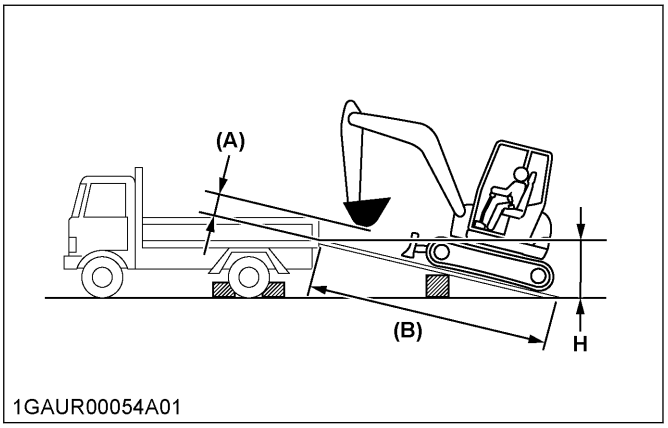

1GAUR00054A01

(A) 20 cm to 40 cm
(B) 4 × H or more

3. For additional safety, use blocks or supports under the ramp and the bed.

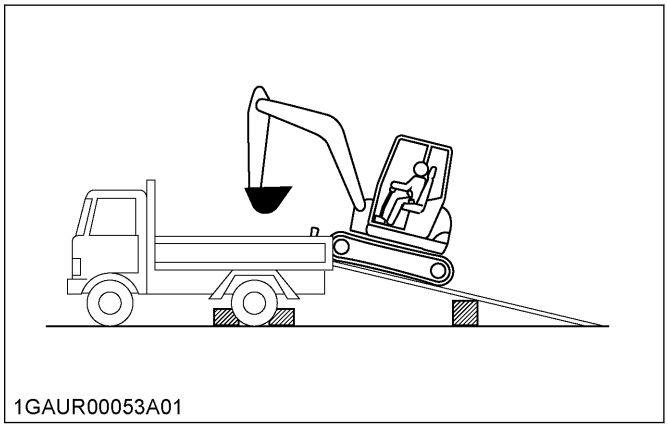
1GAUR00053A01

4. Completely align the ramp and the tracks and then drive the machine slowly up the ramp. After ensuring that the tracks are completely on the bed, swivel the upper body around to the back of the vehicle.
5. Lower the dozer onto the bed.
6. Pull in the bucket and the arm completely and then lower the boom.
7. Stop the engine, release the pressure trapped in the hydraulic system.
8. Set the pilot control lock lever to the LOCK position.
9. Block the tracks with blocks and tie down the machine.

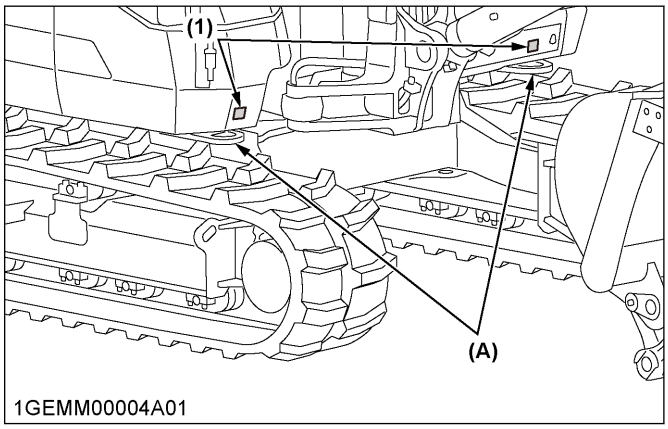

1GEMM00004A01

(1) Tie down point label (A) Tie down point

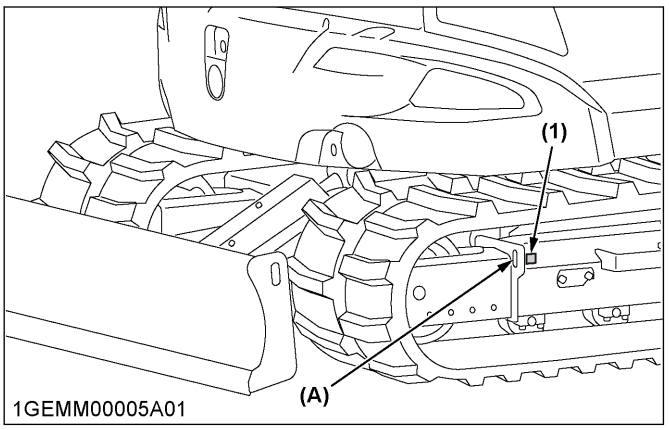

1GEMM00005A01

(1) Tie down point label (A) Tie down point

Tie down point label

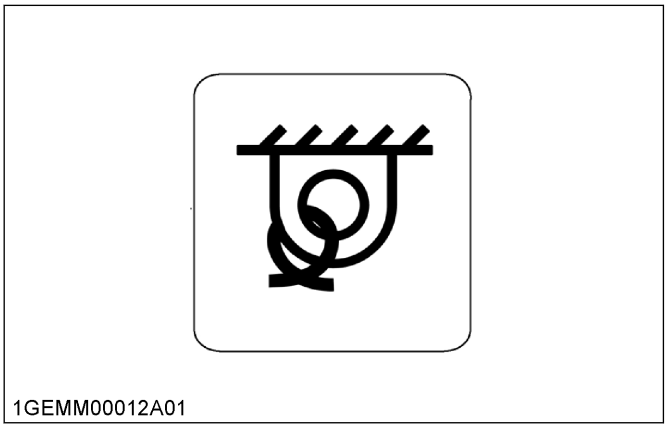
1GEMM00012A01

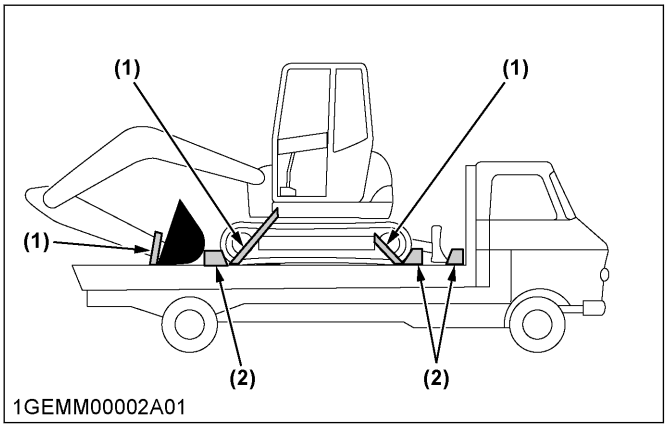

1GEMM00002A01

(1) Chain
(2) Block

IMPORTANT :
- **Use the tie down points only to secure the machine.**

TOWING THE MACHINE

⚠ WARNING
To avoid personal injury or death:
- **When towing the machine or pulling a load, the load must be less than the strength of the**

towing line attached to the machine. Not to be used for tying down or lifting the machine.

- **Towing is only allowed for a short distance and at walking speed.**

1. Attach the tow bar or towing rope to the hook on the machine and to the pulling vehicle. The tow bar should be mounted at a right angle to the vehicles.
2. The operator must be seated during the recovery procedure.
3. Drive slowly with the tractive vehicle to avoid abrupt loads.
   (For the maximum drawbar pull and maximum vertical load, see SAFE LOADING AND TRANSPORT OF THE MACHINE on page 11.)

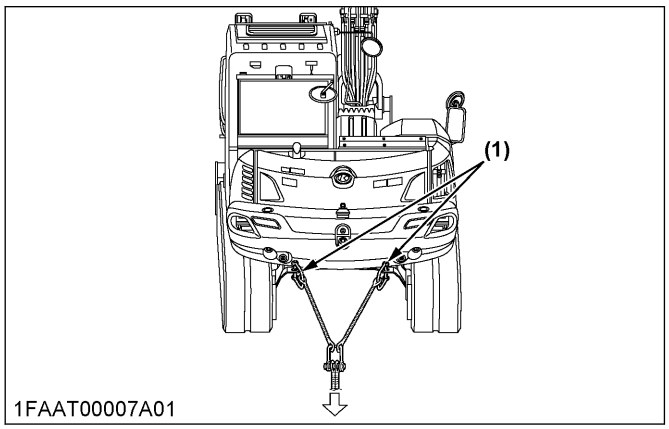

(1) Hook

LIFTING THE EXCAVATOR

⚠ DANGER
To avoid serious injury or death:
- **The correct instructions for safe handling are described here. Read these instructions before moving the machine.**

BASIC POINTS WHEN LIFTING WITH CABLES OR STRAPS

- The lifting and crane operation is to be undertaken according to the safe operation guidelines described.
- The equipment used for lifting mentioned in these instructions are only given as reference. The standards concerning strength, control, and other details are based on the respective applicable guidelines.

SAFETY ASPECTS WHEN LIFTING WITH CABLES OR STRAPS

Abide by following steps when lifting:
- Do not lift loads that exceed the maximum load capacity of the crane.
- Choose correct equipment suitable to the weight, size, and form of the load.
- Do not use steel cables or straps that show signs of wear and tear.
- First assess the center of gravity of the load, position the hook directly over the load, and lift the load so that the center of gravity of the load is as low as possible.
- The steel cables or straps must be fixed in the middle of the hook.
- The load must be lifted vertically from the ground.
- Do not enter the working area under suspended loads and do not move the load over people. The load must only be moved in an area where the balance can be easily maintained.

LIFTING THE MACHINE

⚠ WARNING
To avoid personal injury or death:
- **Do not use the hooks on the roof of canopy and CAB for lifting the machine.**

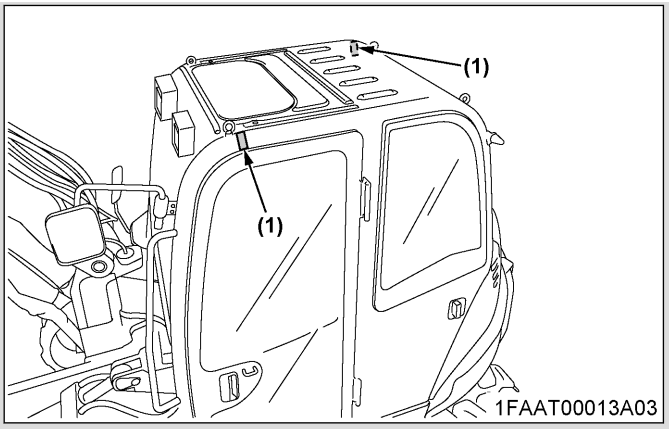

(1) No lift point label

No lift point label

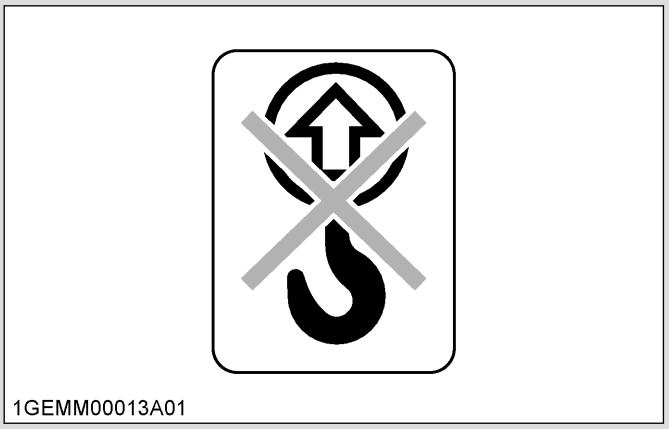

- **Always attach the lifting gear at the specified lifting points. Do not attach the lifting gear to any other eyes or areas as this can lead to substantial damage.**

NOTE :
- **While lifting, carefully keep the machine well balanced with its center of gravity in mind.**
- **Do not lift the machine with the boom swinging or the upper structure swiveling.**

General guidelines for lifting

1. Prepare the machine for lifting as follows (see illustration for correct lifting position):
   a. Pull in the boom completely towards rear.
   b. Pull in the arm completely.
   c. Pull in the bucket completely.
   d. Adjust the boom swing angle to the center so that the boom in positioned parallel to the machine frame.
   e. Swivel the frame around so that the dozer blade is to the rear and frame is parallel with tracks.
   f. Raise the dozer blade fully.

2. Attach the steel wires while observing the following safety points:
   - Always hook the machine at 3 points. One on the boom and left and right of the dozer.

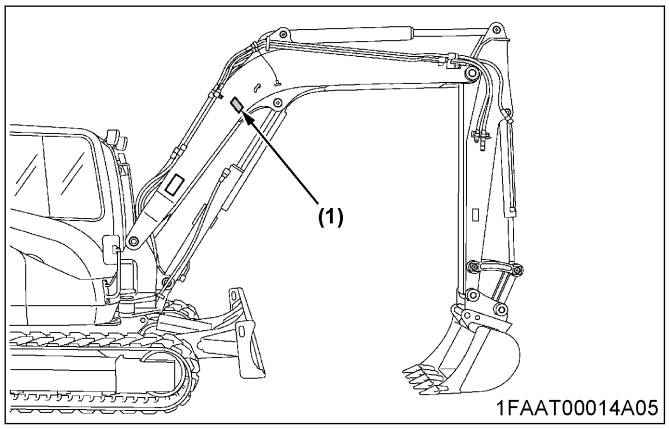

(1) Lift point label

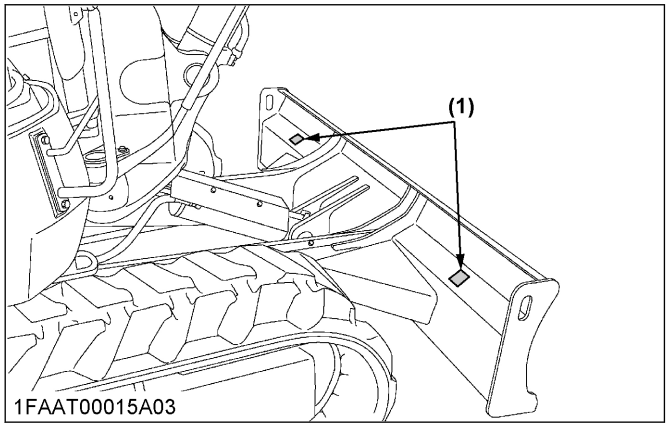

(1) Lift point label

Lift point label

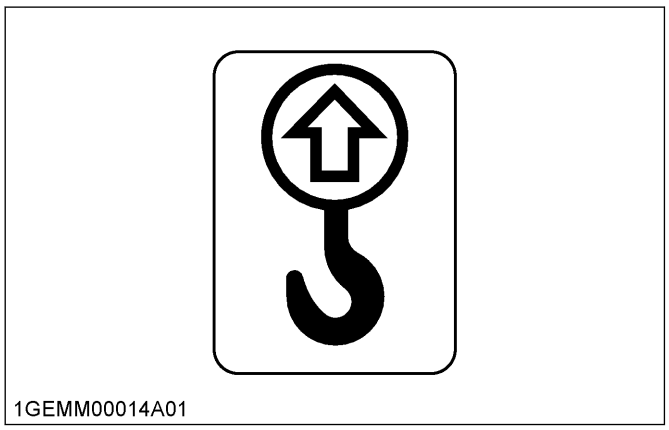

   - Always use a shackle on each lifting hole when attaching the cables or straps.
   - Using protective material at all places where the cables or straps contact the machine.
   - Keep the angle between the front and rear cables or straps within 55°.

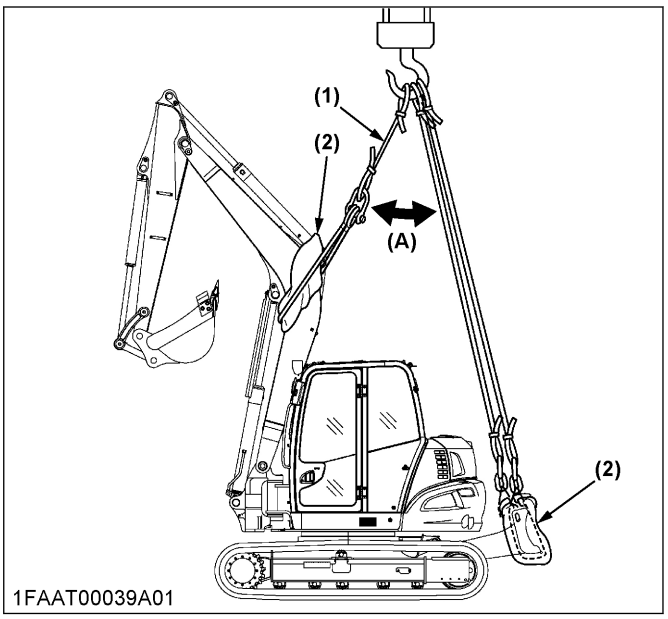

(1) Cable or strap
(2) Protective material
(A) 55° or less

   - Tackle:
     The weight of the machine and the recommended tackle for lifting these loads are mentioned in the following table. Choose components with enough strength.

Machine weight	8485 kg
Load/cable	31.3 kN
Minimum wire diameter (safety factor 6)	22.4 mm or more

NOTE :
- **The above machine weight is based on a machine with a CAB and steel tracks.**
  Steel wire: 6×24

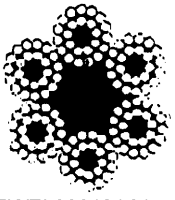

3. Lift the machine while observing the following safety points:
   - Lift slowly and safely.
   - Do not enter the machine area when lifting.
   - Lift the machine horizontally. Modify cable or strap connections according to needs.

Maximum strength
(JIS G 35 25) -6×24

Diameter	Zinc-plated	Not zinc-plated
14 mm (9/16)	89.7 kN	96.6 kN
16 mm (5/8)	117 kN	126 kN
18 mm (45/64)	148 kN	160 kN
20 mm (3/4)	183 kN	197 kN
22.4 mm (-)	230 kN	247 kN

MAINTENANCE

⚠ WARNING

To avoid personal injury or death:

- **Before refueling or performing maintenance on the machine, take the following steps:**
  1. **Park the machine on a firm, flat, and level surface.**
  2. **Lower the attachments and the dozer blade to the ground.**
  3. **Stop the engine.**
  4. **Release the pressure from the hydraulic system.**
  5. **Check the machine and the surrounding area for any potential safety issues.**
- **Thoroughly read and understand the safety warnings in this manual before performing any work on the machine.**
  (See Precautions when performing checks or maintenance on page 12.)

PRECAUTIONS WHEN WASHING THE MACHINE

⚠ WARNING

To avoid personal injury or death:

- **Set the nozzle of the pressure washer to a low-pressure setting or use a low-pressure nozzle, and maintain a distance of at least 2 m from the machine when washing it. If the spray is concentrated in a single spot, or if the machine is washed from too close with a high-pressure flow, the following accidents, machine damage, and malfunctions may occur:**
  - **The wire coverings may be damaged or the wiring may be severed, causing a fire.**
  - **The hydraulic hoses may be damaged, causing a high-pressure oil blowout, which may cause injury.**
  - **The stickers or safety labels may peel off.**
  - **Water may seep into the electronic components, the engine compartment, the cabin, or other parts of the machine, leading to damage or malfunctions.**
  - **The water may cause damage to the rubber based components such as the tracks and the oil seals, to the decorative covers and other plastic-based components, or to the windows and other glass-based components.**
  - **The paint, coatings, and plating may peel off.**

IMPORTANT :

- **Water entering the electrical system can cause malfunctions. Do not spray water directly on electrical components such as sensors or connectors.**
- **If you wash the machine while the engine is running, water can splash and get into the air cleaner through its intake and cause engine damage. Be careful not to spray water on the air cleaner.**

When misused, pressure washers can cause personal injury and machine damage. Always operate the pressure washer correctly and safely in accordance with its operator's manual and safety labels.

Do not use a high-pressure nozzle or setting

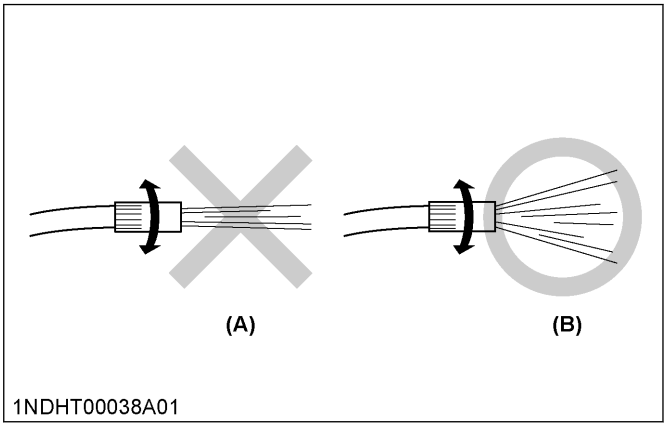

(A) High pressure *(B) Low pressure*

Do not wash from close range

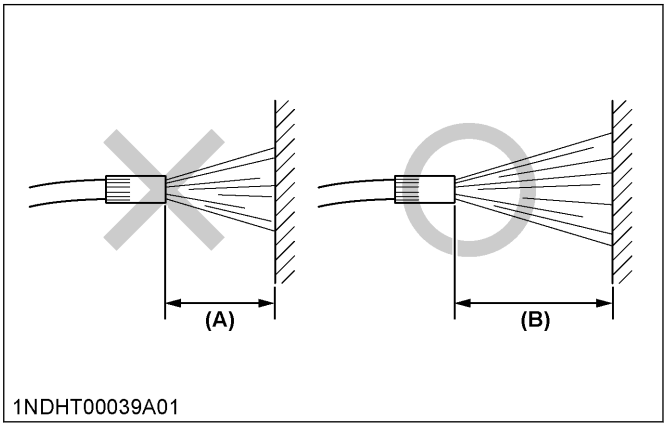

(A) Less than 2 m *(B) 2 m or more*

MAINTENANCE INTERVALS

No.	Check points		Measures	Hour meter indicator												Interval	Ref. page	
				50	100	150	200	250	500	600	750	1000	1500	2000	3000			
1	Walk-around inspection		Check	Daily check													97	
2	Coolant		Check	Daily check													97	
			Change													Every 2 years	119	
3	Fuel		Check	Daily check													98	
4	Engine oil		Check	Daily check													98	
			Change	◎				○	○		○	○	○	○	○	Every 250 hrs or every 6 months	111	
5	Hydraulic oil		Check	Daily check													99	
			Change									○		○	○	Every 1000 hrs	99	*1
6	Water separator		Check	Daily check													100	
			Clean	○	○	○	○	○	○	○	○	○	○	○	○	Every 50 hrs	103	
			Drain													Service as required	122	
7	Radiator, oil cooler, and fuel cooler		Check	Daily check													100	
8	ROPS		Check	Daily check													101	
9	V-belt		Check	Daily check													101	
			Adjust				○			○		○		○	○	Every 200 hrs	106	
10	Washer liquid		Check	Daily check													101	
11	Engine and electrical wiring		Check	Daily check													101	
12	Evacuator valve		Check	Daily check													101	
13	DPF		Check	Daily check													119	
			Check													Every 1 year	119	*2
			Clean													Service as required	122	*2
14	Exhaust leaks		Check	Daily check													102	
15	Electrical equipment		Check	Daily check													102	
16	Seat belt		Check	Daily check													102	
17	Front attachments	Bucket and bucket link pin	Grease	Daily check													102	
		Boom swing fulcrum	Grease		○		○		○	○		○	○	○	○	Every 100 hrs	105	
		Others	Grease					○	○		○	○	○	○	○	Every 250 hrs	110	
18	Fuel tank		Drain	○	○	○	○	○	○	○	○	○	○	○	○	Every 50 hrs	103	
19	Battery condition		Check	○	○	○	○	○	○	○	○	○	○	○	○	Every 50 hrs	103	
20	Swivel bearing teeth		Grease	○	○	○	○	○	○	○	○	○	○	○	○	Every 50 hrs	105	

(Continued)

No.	Check points		Measures	Hour meter indicator												Interval	Ref. page	
				50	100	150	200	250	500	600	750	1000	1500	2000	3000			
21	Tracks		Check	○	○	○	○	○	○	○	○	○	○	○	○	Every 50 hrs	105	
22	Radiator hoses and clamps		Check				○			○		○		○	○	Every 200 hrs	108	
			Replace													Every 2 years	119	
23	Swivel ball bearing		Grease				○			○		○		○	○	Every 200 hrs	108	
24	Air filter element	Outer element	Clean				○			○		○		○	○	Every 200 hrs	108	*3
			Replace									○		○	○	Every 1000 hrs	117	*3
		Inner element	Replace									○		○	○	Every 1000 hrs	117	*3
25	Fuel line		Check				○			○		○		○	○	Every 200 hrs	109	
			Replace													Every 2 years	120	*4
26	Intake air line		Check				○			○		○		○	○	Every 200 hrs	110	
			Replace													Every 2 years	121	*4
27	Pilot valve linkage		Grease					○	○		○	○	○	○	○	Every 250 hrs	111	
28	Engine oil filter		Replace	◎				○	○		○	○	○	○	○	Every 250 hrs or every 6 months	112	
29	Water separator filter element		Replace						○			○	○	○	○	Every 500 hrs	112	
30	Travel motor gear oil		Change	◎					○			○	○	○	○	Every 500 hrs	113	
31	Fuel filter cartridge		Replace						○			○	○	○	○	Every 500 hrs or every 1 year	113	
32	Hydraulic return filter element		Replace					○			○					Every 500 hrs (initial: 250 hrs)	114	
33	Hydraulic suction filter element		Replace									○		○	○	Every 1000 hrs	115	*2
34	Hydraulic pilot filter element		Replace									○		○	○	Every 1000 hrs	114	*2
35	Pilot line filter		Clean									○		○	○	Every 1000 hrs	117	*2
36	Engine valve clearance		Check									○		○	○	Every 1000 hrs	117	*2
37	Injector tip		Check										○		○	Every 1500 hrs	117	*2
38	Oil separator element		Replace										○		○	Every 1500 hrs	117	
39	EGR cooler		Check										○		○	Every 1500 hrs	118	*2

(Continued)

No.	Check points	Measures	Hour meter indicator												Interval	Ref. page	
			50	100	150	200	250	500	600	750	1000	1500	2000	3000			
40	Front idler and track roller oil	Change											○		Every 2000 hrs	118	*2
41	Alternator and starter motor	Check											○		Every 2000 hrs	118	*2
42	EGR system	Check												○	Every 3000 hrs	118	*2
43	Turbo charger	Check												○	Every 3000 hrs	118	*2
44	Electrical wiring and fuses	Check													Every 1 year	118	*2
45	Exhaust manifold (cracks, gas leakage and mounting screw)	Check													Every 1 year	118	*2
46	Intake air line for air leaks	Check													Every 1 year	118	*2
47	Boost sensor	Check													Every 1 year	119	*2
48	Air flow sensor	Check													Every 1 year	118	*2
49	DPF differential pressure sensor and piping for gas leaks	Check													Every 1 year	119	*2
50	DPF exhaust gas temperature sensor	Check													Every 1 year	119	*2
51	EGR and piping for gas leaks	Check													Every 1 year	119	*2
52	Oil separator rubber hose	Replace													Every 2 years	121	*2
53	DPF differential pressure sensor rubber piping (front and back)	Replace													Every 2 years	121	*2
54	Suction pipe downstream the air flow sensor	Replace													Every 2 years	121	*2
55	Boost sensor pressure rubber piping	Replace													Every 2 years	121	*2
56	EGR cooler hose	Replace													Every 2 years	121	*2
57	Hydraulic hoses	Replace													Every 2 years	121 134	*2
58	Plastic parts and synthetic leather	Clean													Service as required	122	

*1 When using a hydraulic hammer, change hydraulic oil and return filter according to the hydraulic oil change table. (See Changing the hydraulic oil on page 115)

*2 Contact your local Kubota dealer for this service.

*3 Clean and replace the air filter more frequently if used in dusty conditions. When the filter is very dirty due to dusty conditions, replace the filter.

*4 Replace only if necessary.

IMPORTANT :

- **◎ represents the interval for the first servicing only.**
- **When using biodiesel, check the maintenance requirements of biodiesel fuel as the intervals will change for some of the items.**
  (See BIODIESEL FUEL (BDF) on page 137.)

1. Air conditioner

No.	Check points	Measures	Hour meter indicator											Interval	Ref. page	
			50	100	150	200	250	500	600	750	1000	1500	2000	3000			
1	Air conditioner filter	Clean			○				○	○		○		○	Every 150 hrs	105	*1
		Replace							○					○	Every 600 hrs	—	*1
2	Air conditioner condenser	Clean				○			○		○		○	○	Every 200 hrs	110	
3	Air conditioner pipes and hoses	Check													Every 1 year	118	
		Replace													Every 2 years	119	
4	Refrigerant (gas)	Check													Service as required	121	

*1 Clean and replace the air filter more frequently if used in dusty conditions. When the filter is very dirty due to dusty conditions, replace the filter.

OPENING AND CLOSING THE COVERS

1. Opening and closing the fuel tank cover

Opening

1. Insert the key into the key slot and turn it clockwise to unlock the hood.
2. Press the button to open the tank cover.

Closing

1. Lower the tank cover and push it tightly.
2. Turn the key counterclockwise to lock the tank cover.

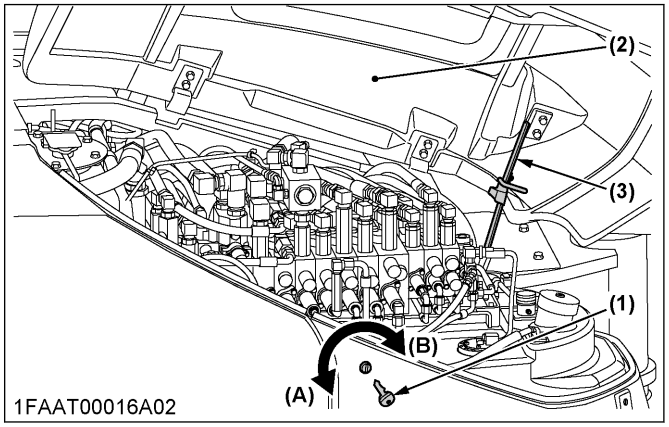

(1) Key
(2) Tank cover
(3) Stay
(A) Lock
(B) Unlock

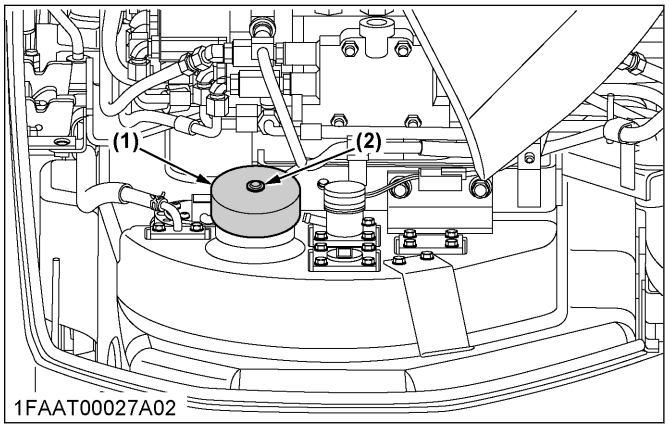

(1) Fuel tank cap
(2) Air vent

IMPORTANT :

- **Take appropriate measures to insure that fuel is not contaminated during the refueling operation.**

2. Opening and closing the engine hood

⚠ WARNING

To avoid personal injury or death:

- **Do not open the engine hood with the engine running, unless it is an emergency.**
- **Do not touch the exhaust muffler or the exhaust pipe. This can cause serious burns.**

Opening

1. Insert the key into the key slot and turn it clockwise to unlock the hood.
2. Pull the catch to open the hood.

Closing

1. Push the hood downwards until it locks into place automatically.
2. Turn the key counterclockwise to lock the hood.

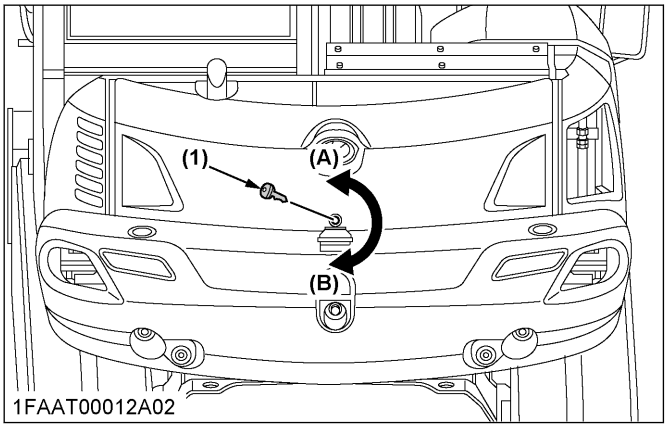

(1) Key
(A) Lock
(B) Unlock

3. Opening and closing the side cover

Opening

1. Open the engine hood.
2. Raise the catch lever to unlock the side cover.
3. Push the side cover all the way forward.
   The cover will be held in place by a link.

Closing

1. Pull the side cover all the way back.
2. Pull down the catch lever to lock the side cover.

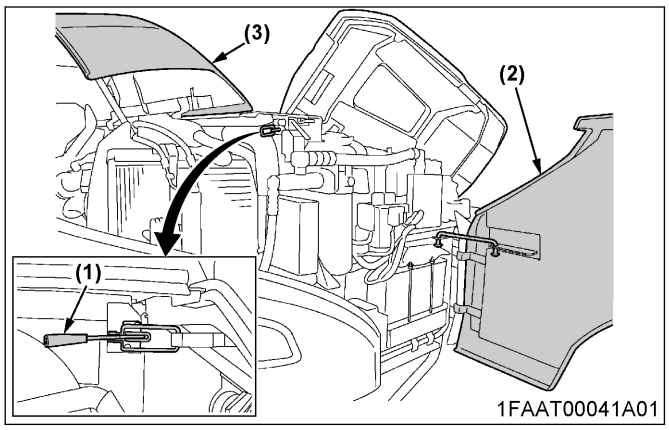

(1) Catch lever
(2) Side cover
(3) Engine hood

4. Storing tools

The toolbox is located behind the front cover, which is located on the front of the swivel frame.

1. Open the front cover.
2. Store the tools in the storage box.

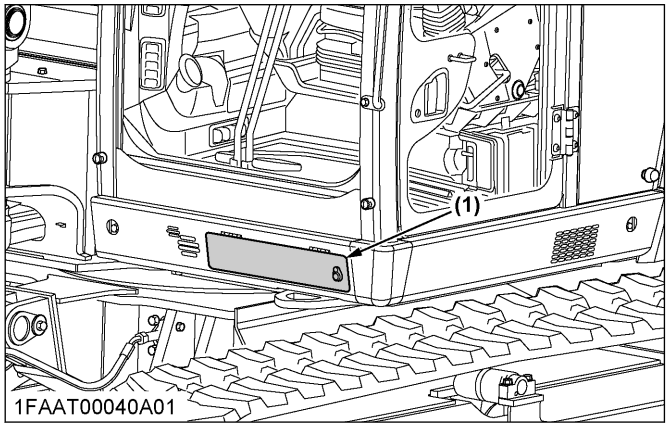

(1) Toolbox

5. Cup holder

The cup holder is located next to the operator's seat.

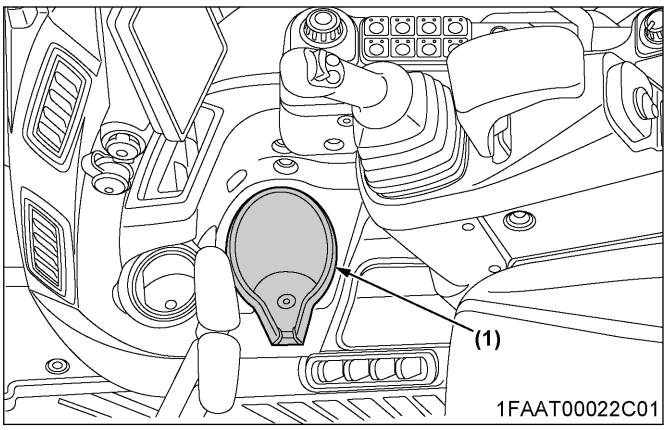

(1) Cup holder

6. Storing the grease gun

1. Open the side cover.
2. Store the grease gun as shown in the following illustration.

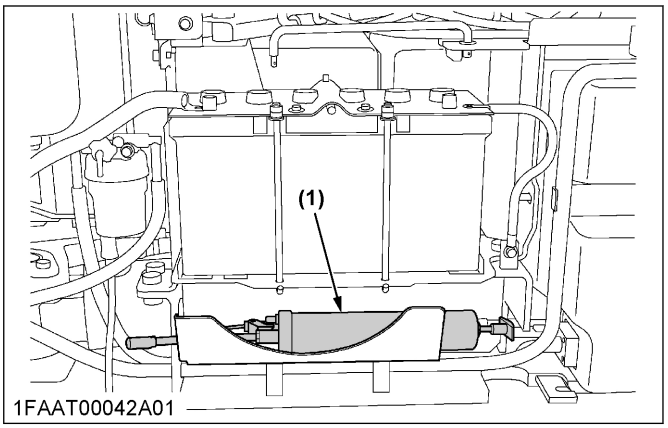

(1) Grease gun

7. Where to keep the operator's manual

The operator's manual is stored to the left of the seat.

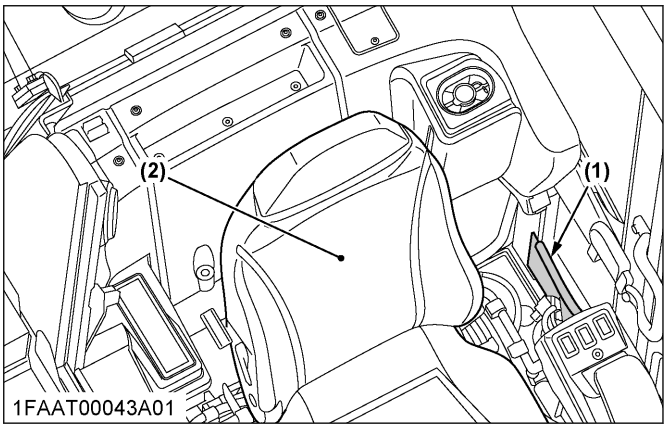

(1) Operator's manual storage
(2) Seat

8. Utility box

The utility box the located under the rear cover.

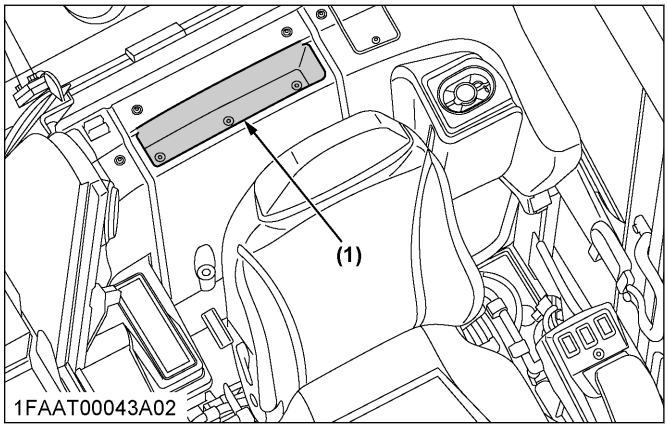

(1) Utility box

9. Where to store the fire extinguisher

The fire extinguisher is stored to the left of the seat.

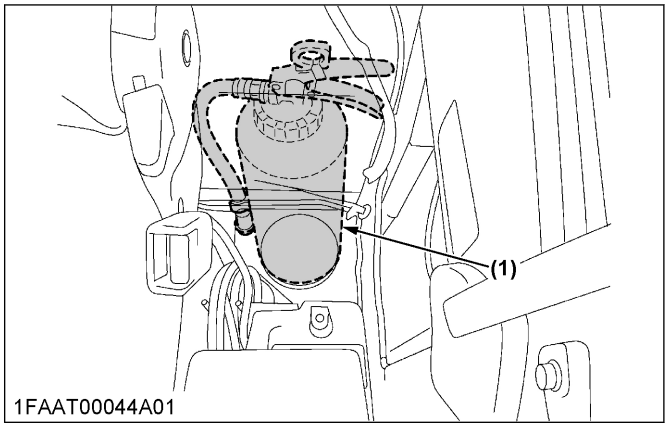

(1) Fire extinguisher

DAILY CHECKS

For your own safety and to assure a long operating life of your machine, careful checks should be made before each operation.

⚠ WARNING

To avoid personal injury or death:

- **When operating, keep hands and body inside of the operator station.**
- **Do not touch the control levers and pedals from outside the operator station while the engine is running.**

1. Walk-around inspection

⚠ WARNING

To avoid personal injury or death:

- **Check the hot parts for any buildup of flammable materials, as such buildup can lead to a fire.**

1. Check the machine for visible damage, loose nuts and screws, and leaks.
2. Check for any accumulated dirt adjacent to hot components (such as the engine or exhaust manifold), and remove as necessary.
3. Check for accumulated residue from leaves, straw, pine needles, twigs, barks, or any other flammable materials, and remove as necessary.
4. Check the safety labels on the machine, and ensure that they are completely legible.
   (See SAFETY LABELS on page 16.)

2. Checking the coolant level

⚠ WARNING

To avoid personal injury or death:

- **Park the machine on a firm, flat, and level surface.**
- **Make sure that the engine is turned off.**
- **Do not open the radiator cap right after the engine stops. It can cause serious burns on contact with escaping hot coolant fluid.**
- **Check the coolant level in the recovery tank only after the engine has cooled down.**
- **Remove the radiator cap only if absolutely necessary.**

The radiator has a recovery tank. If the coolant level in the radiator sinks, the water will be automatically forwarded to the radiator.

1. Open the side cover.
   (See Opening and closing the side cover on page 95.)

2. Check the coolant level in the recovery tank and fill up if necessary. The coolant level should be between the **[FULL]** and **[LOW]** marks.

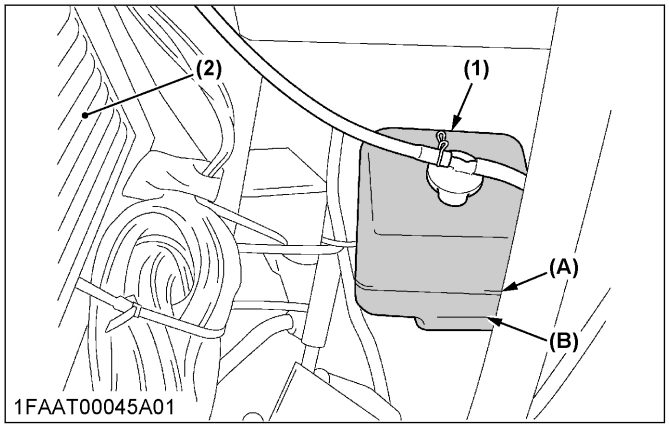

(1) Recovery tank
(2) Radiator
(A) FULL
(B) LOW

IMPORTANT :
- **Do not fill the recovery tank over the [FULL] mark.**
- **Do not fill with dirty or salty water.**

3. Checking the fuel level

⚠ WARNING
To avoid personal injury or death:
- **Stop the engine before adding fuel.**
- **Keep open flames away from the machine, or it may cause a fire.**
- **Tighten the fuel cap after refueling.**

IMPORTANT :
- **When the temperature is over -5 ℃, use No.2-D diesel fuel. When the temperature is below -5 ℃, use No.1-D diesel fuel.**
- **Make sure that the fuel tank does not run empty. Air will enter the fuel system, and then it must be purged before restarting.**
  (See PURGING THE FUEL SYSTEM on page 123.)
- **To prevent condensation (water) accumulation in the fuel tank, fill the fuel into the tank before parking overnight.**
- **Be very aware of the remaining fuel level so that the engine does not to stall. If the engine stalls, it may fail to get restarted for a while. This is to protect the emission purifying device.**

1. Turn the starter switch to the **[RUN]** position.

   NOTE :
   - **Even when the machine is off, press the jog dial, and then the display shows the hour meter, fuel gauge, water temperature gauge, and clock for 10 seconds.**

2. Check the fuel level by looking at the fuel level indicator.

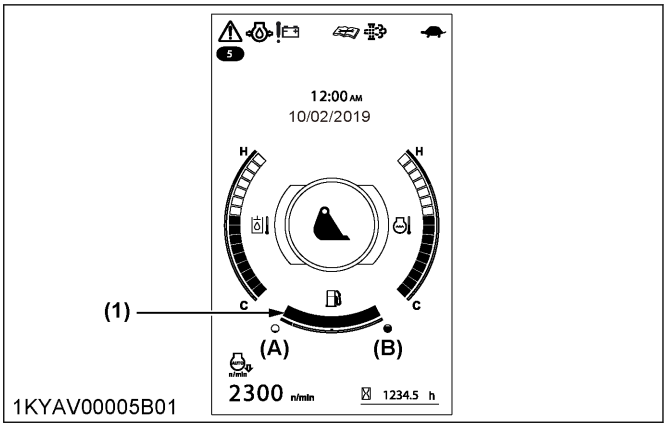

(1) Fuel gauge
(A) EMPTY
(B) FULL

3. If necessary, open the cap and fill with fuel.

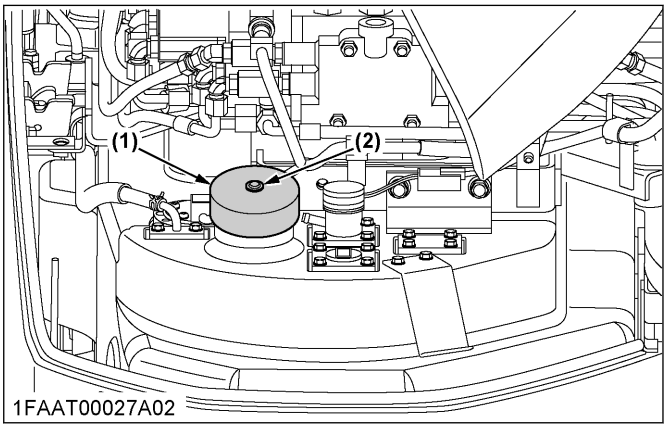

(1) Fuel tank cap
(2) Air vent

Fuel tank capacity	115 L

IMPORTANT :
- **Users must take appropriate actions to insure fuel is not contaminated during the refueling operation.**

4. Checking the engine oil level

⚠ WARNING
To avoid personal injury:
- **Stop the engine before checking the oil level.**

IMPORTANT :
- **Use engine oil with the correct viscosity (according to the outside temperature).**
- **After stopping the engine, wait for 5 minutes and then check the oil level.**

- **On DPF-equipped engines, part of the fuel may get mixed with engine oil during the regenerating process. This may dilute the oil and increase its quantity. If the oil rises above the oil level gauge upper limit, it means the oil has been diluted too much. In such case, immediately change the oil.**

1. Park the machine on a firm, flat and level surface, stop the engine.
2. Insert the engine oil dipstick fully into the opening.
3. Remove the dipstick and check the oil level.

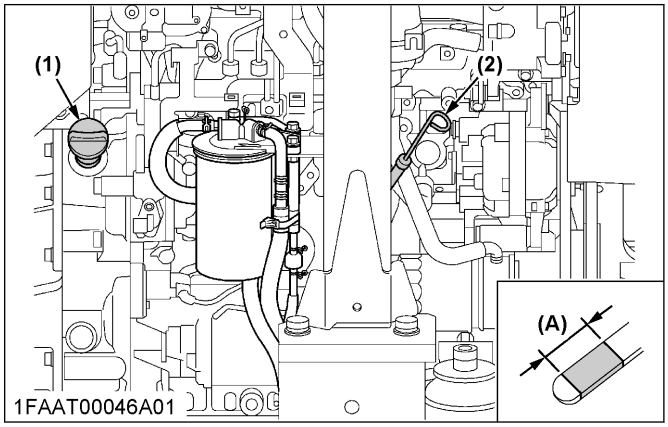

(1) Oil filling port
(2) Engine oil dipstick
(A) Required oil level range

4. Add oil if necessary.

Engine oil volume (with engine oil filter)	9.7 L

5. Checking the hydraulic oil level

⚠ WARNING

To avoid personal injury or death:

- **Stop the engine before checking the oil level.**
- **There is a risk of being injured by hot pressurized hydraulic oil. Make sure that the oil has cooled down sufficiently, and then release the pressure in the tank before loosening the hydraulic oil filling plug.**

IMPORTANT :

- **Before filing with oil, wipe away all sand and dust from around the oil port. Make sure to use an identical type of hydraulic fluid.**
- **The machine has been filled with hydraulic fluid before delivery. Do not mix different oils. (See RECOMMENDED OILS on page 135.)**

1. Park the machine on a firm, flat and level surface, bring the boom to the highest position, pull the arm and bucket inward, and swing the boom to the leftmost position. Then lower the dozer to the ground and stop the engine.

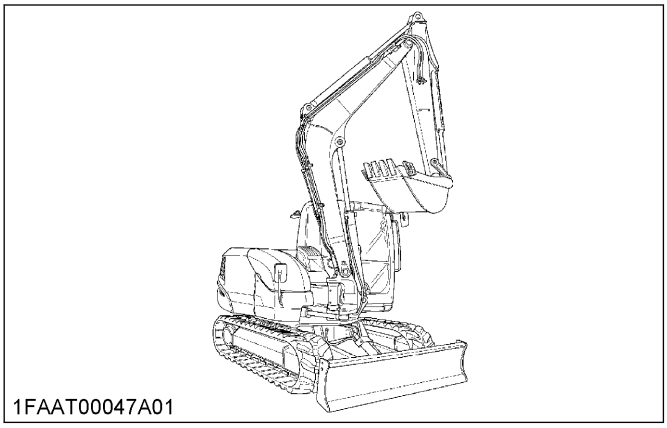

2. Check the oil level, making sure that it lies at the center of the gauge at normal temperature (10 ℃ to 30 ℃).
   Enough oil is present when the oil level is at the center mark.

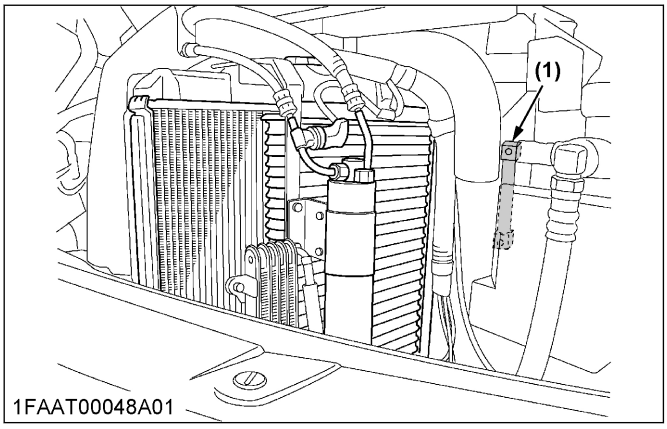

(1) Gauge

3. If the oil level is below the center mark, loosen the oil filling plug gradually to release the pressure in the tank, and then fill the tank up with oil at the oil filling port.

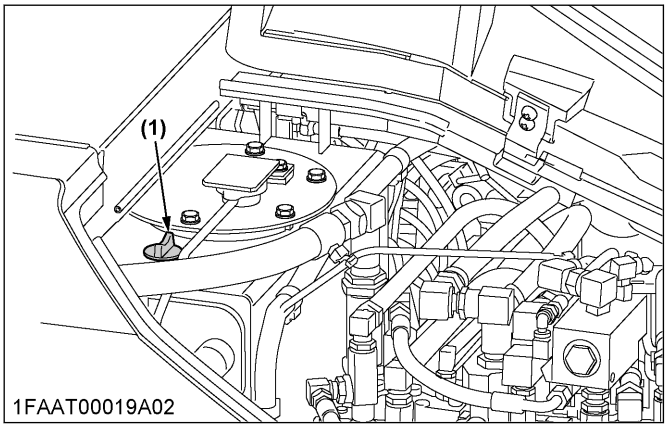

(1) Oil filling plug

6. Checking the water separator

IMPORTANT :

- **As water is collected in the cup, the red float rises up.**
  Once the float has reached the specified line, immediately drain the water separator.
- **When reattaching the water separator, make sure that no dust or dirt gets into the cup or other surrounding parts.**
- **Purge the fuel system before restarting the machine.**
  (See PURGING THE FUEL SYSTEM on page 123.)

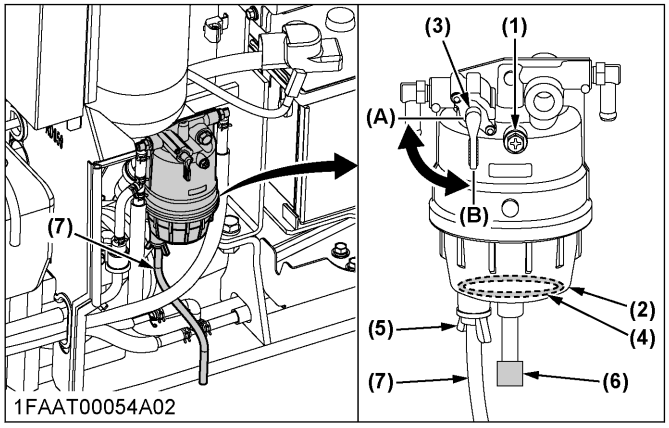

(1) Screw
(2) Cup
(3) Shutoff-valve
(4) Float
(5) Drain plug
(6) Connector of water level sensor
(7) Hose
(A) OFF
(B) ON

As separated water is collected in the cup, the red float rises up. Regularly check the water level and drain the water as necessary.

NOTE :

- **Water and dirt contained in the fuel settle in the water separator. When deposits of such foreign substances build up, clean the water separator.**

1. Open the side cover.
   (See Opening and closing the side cover on page 95.)
2. Check the water level. If the float is raised, drain the water as follows:
   a. Set the shutoff-valve to the **[OFF]** position so that no fuel can run out.
   b. Place a container at the end of the hose to collect the drained water.
   c. Loosen the top screw first and then loosen the drain plug and discharge the water until the float drops to the bottom.
   d. Tighten the drain plug and top screw.
   e. Set the shutoff-valve to the **[ON]** position.
3. Close the side cover.

7. Checking the radiator, oil cooler, and fuel cooler

⚠ WARNING

To avoid personal injury or death:

- **Always stop the engine before checking the radiator and the oil cooler.**
- **Wear eye protection when cleaning with compressed air.**
- **Replace the hydraulic hoses and all water hoses every 2 years.**
  (For details on replacing hydraulic hoses, see PERIODIC REPLACEMENT OF PARTS on page 134.)
- **Inspect the hydraulic hoses and all water hoses daily.**
  Have the excavator repaired immediately if any of the following issues are discovered.
  Such issues may cause burns or injury. They may also cause engine failure, serious engine damage, hydraulic system failure, or serious hydraulic system damage.
  - **Scratches, cracks, or swelling in hydraulic hoses or water hoses.**
  - **Leakage at joints or connecting points.**
  - **Missing or damaged protective sleeve or grommet.**
  - **Loose mounting bolt, damaged bracket.**

  (For details on inspecting hydraulic hoses, see PERIODIC REPLACEMENT OF PARTS on page 134.)
- **Do not touch hydraulic hoses or water hoses with your hand. You may get burned.**

IMPORTANT :

- **Radiator, oil cooler fins and ribs must be clean in order to avoid overheating the engine and to allow free flow of air through the cooling elements.**
- **Pressure of compressed air must be under 205 kPa (2.1 kgf/cm^2).**

1. Check to see if the fins are clogged with dirt. If so, remove the dirt by using compressed air or steam. When cleaning, wear eye protection.

2. Check the rubber hoses for damage and replace if cracked or old. If hose clamps are loose or water leaks, tighten the bands securely.

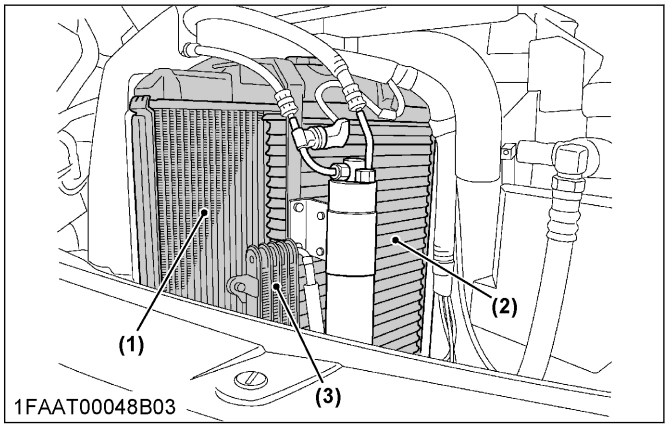

(1) Radiator
(2) Oil cooler
(3) Fuel cooler

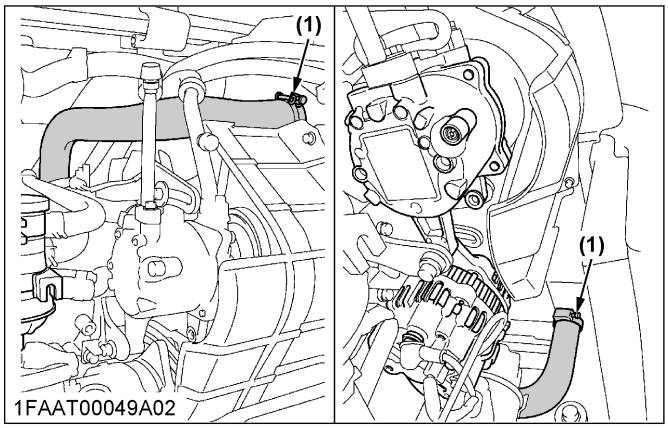

(1) Radiator hose and clamp (Both sides)

8. Checking the ROPS

⚠ WARNING
To avoid personal injury or death:
- **Never remove the ROPS.**

1. Check all of the bolts to make sure that none of them have come loose.
2. Check the ROPS for damage. If it is found to be damaged or deformed, it needs to be replaced. Contact your local Kubota dealer.

9. Checking the V-belt

⚠ WARNING
To avoid personal injury or death:
- **Stop the engine before checking the V-belt.**

Check the V-belt for cracks and proper tension.
(See Adjusting the V-belt tension on page 106.)

10. Checking the washer liquid

1. Check the level of the washer liquid in the tank.
2. Top up the washer liquid as necessary.

NOTE :
- **If the window washer is switched on while the washer liquid tank is empty, the motor may get damaged. Always keep the tank filled.**

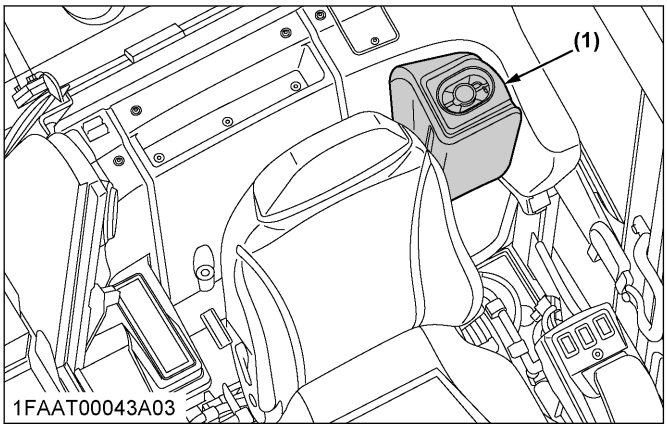

(1) Washer liquid tank

11. Checking and cleaning the engine and electrical wiring

⚠ WARNING
To avoid personal injury or death:
- **Always stop the engine before cleaning the wiring, cables and engine.**

1. Check whether flammable substances have gathered on the battery, cables, wiring, muffler, or engine, and thoroughly remove any such substances.
2. Check the electrical circuitry for disconnections, shorts, or loose terminals.

12. Checking the evacuator valve

1. Open the evacuator valve.

2. Get rid of large particles of dust and dirt.

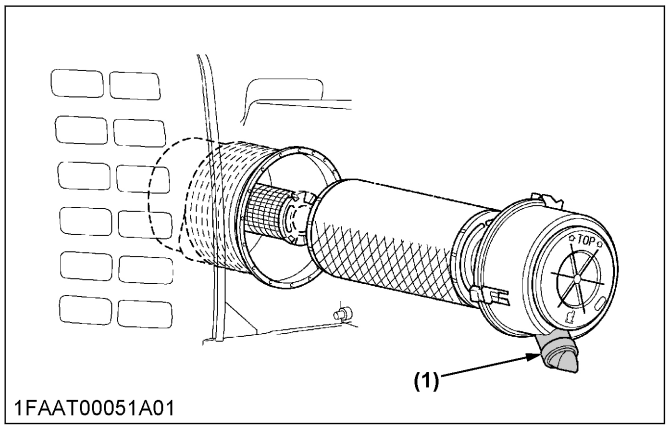

(1) Evacuator valve

NOTE :
- **If the evacuator valve is missing or damaged, the air cleaner does not function properly. Accordingly, its element's service life will get shorter.**

13. Checking the diesel particulate filter (DPF) muffler

⚠ WARNING
To avoid personal injury or death:
- **Before checking or cleaning the DPF muffler, stop the engine and wait long enough until it is cooled down.**

1. Check to make sure that nothing flammable is deposited around the DPF muffler.
   Otherwise a fire may result.

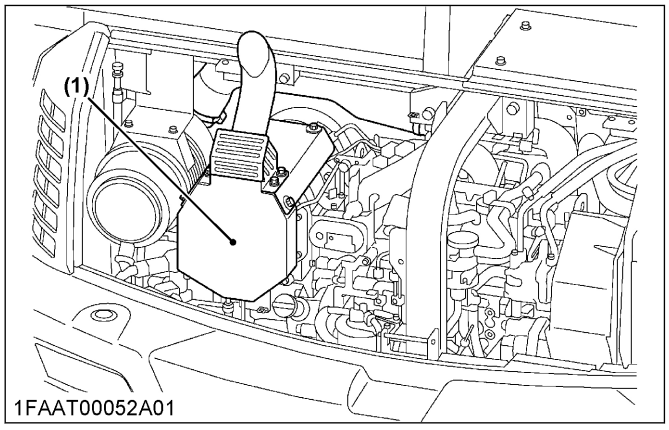

(1) DPF muffler

14. Checking for exhaust leaks

1. Check to make sure that there are no exhaust leaks.

15. Checking the electrical equipment

1. Check the function of the working light.
   (See OPERATING THE WORKING LIGHT SWITCH on page 47.)
2. Check the function of the interior lamp.
   (See INTERIOR LAMP on page 55.)
3. Check the function of the wiper and washer.
   (See OPERATING THE WIPER AND WASHER on page 55.)
4. Check the function of the air conditioner.
   (See AIR CONDITIONER on page 57.)

16. Checking the seat belt

1. Check the seat belt, the socket, and the metal fittings for dirt or damage.
   If any of them are found to be damaged or deformed, they need to be replaced. Contact your local Kubota dealer.

17. Greasing bucket link pin

⚠ WARNING
To avoid personal injury or death:
- **First, lower all attachments to the ground, stop the engine.**
- **While greasing, do not step on the bucket teeth.**

IMPORTANT :
- **When doing excavation work in water, generously grease the following points. Grease once again after finishing the work.**

1. Grease the marked grease fittings shown in the following illustrations.

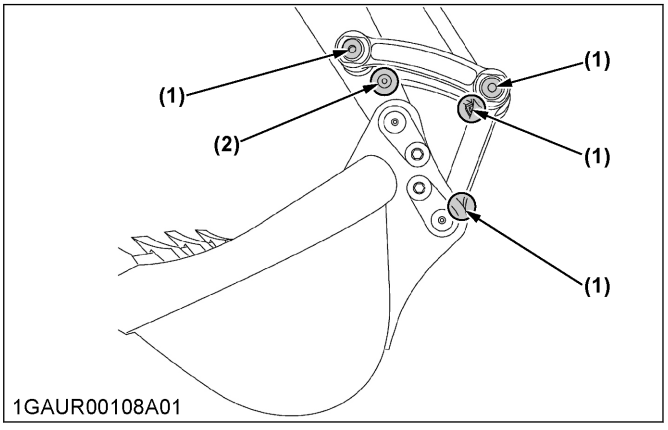

(1) Bucket link pin
(2) Fixing pin between arm and bucket

REGULAR CHECKS AND MAINTENANCE WORK

⚠ WARNING
To avoid personal injury or death:
- **When operating, keep hands and body inside the operator station.**
- **Do not touch the control levers and the pedals from outside the operator station while the engine is running.**

EVERY 50 SERVICE HOURS

1. Draining water from the fuel tank

⚠ WARNING
To avoid personal injury or death:
- **Stop the engine before draining water from the fuel tank.**
- **Do not smoke during the inspection.**

1. Open the cover.
2. Open the drain shutoff-valve.

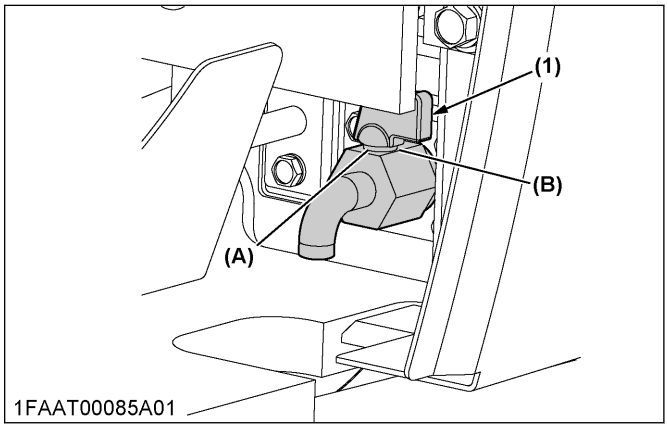

(1) Drain shutoff-valve
(A) OPEN
(B) CLOSE

2. Cleaning the water separator

IMPORTANT :
- **In reattaching the water separator, be careful to keep off dust and dirt.**
- **Purge the fuel system before restarting the machine.**
  (See PURGING THE FUEL SYSTEM on page 123.)

Water and dirt contained in fuel will settle in the water separator. When deposits of such foreign substances build up, drain and clean the water separator as follows.

Draining
1. Set the shutoff-valve to the **[OFF]** position.
2. Place a container at the end of the hose to collect the drained water.
3. Loosen the top screw first and then loosen the drain plug and discharge the water until the float drops to the bottom.
4. Tighten the drain plug and top screw.
5. Set the shutoff-valve to the **[ON]** position.

Cleaning
1. Remove the connector of water level sensor.
2. Set the shutoff-valve to the **[OFF]** position.
3. Loosen and remove the cup properly, and clean its inside with diesel fuel.
4. Tighten up the cup properly.
5. Set the shutoff-valve to the **[ON]** position.
6. Install the connector of water level sensor.

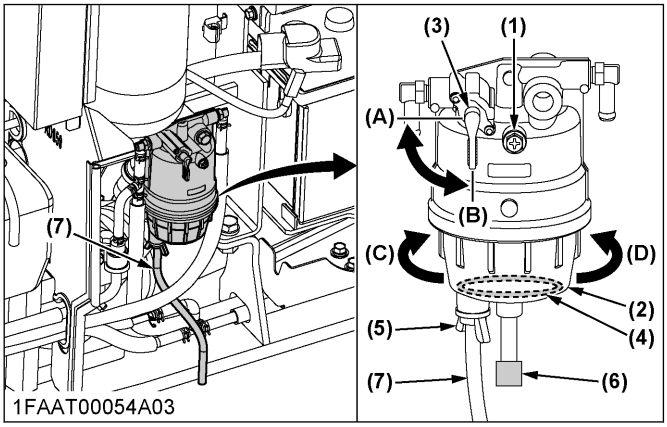

(1) Screw
(2) Cup
(3) Shutoff-valve
(4) Float
(5) Drain plug
(6) Connector of water level sensor
(7) Hose
(A) OFF
(B) ON
(C) Loosen
(D) Tighten

3. Checking the battery condition

⚠ DANGER
To avoid the possibility of a battery explosion:
For the refillable type battery, observe the following instructions:
- **Do not use or charge the refillable type battery if the fluid level is below the [LOWER] (lower limit level) mark. Otherwise, the battery component parts may prematurely deteriorate,**

which may shorten the battery's service life or cause an explosion. Check the fluid level regularly and add distilled water as required so that the fluid level is between the [UPPER] and [LOWER] levels.

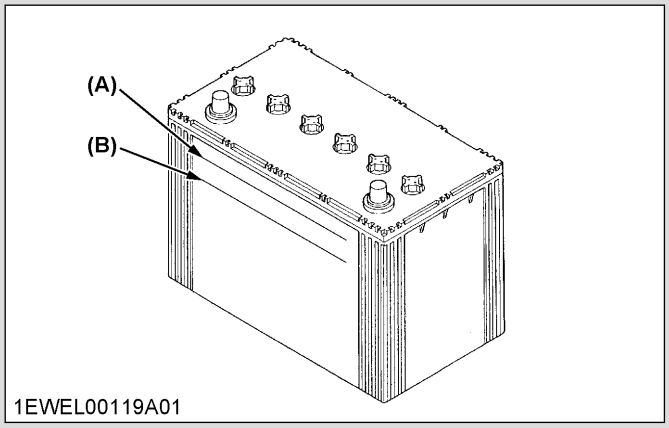

(A) UPPER
(B) LOWER

⚠ WARNING
To avoid personal injury or death:
- **Never remove the vent caps while the engine is running.**
- **Keep electrolyte away from eyes, hands, and clothes. If you are spattered with it, immediately wash it away completely with water and get medical attention.**
- **Wear eye protection and rubber gloves when working around the battery.**
- **Before inspecting or dismounting the battery, turn the starter switch to the [STOP] position and disconnect the ground cable.**
- **When removing the battery, always disconnect the ground cable first. When installing a battery, always connect the ground cable last. This prevents a possible explosion caused by sparks.**

NOTE :
- **Mishandling the battery shortens the service life.**
- **The original battery is maintenance-free, but needs some servicing.**
- **If the battery charge is low, it will be difficult to start the engine and the lights will be dim. It is important to check the battery periodically.**

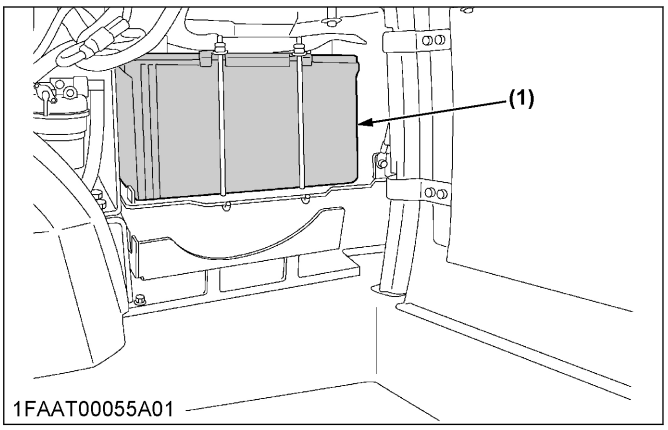

(1) Battery

1. Open the side cover.
   (See Opening and closing the side cover on page 95.)
2. Check the battery condition by reading the indicator.

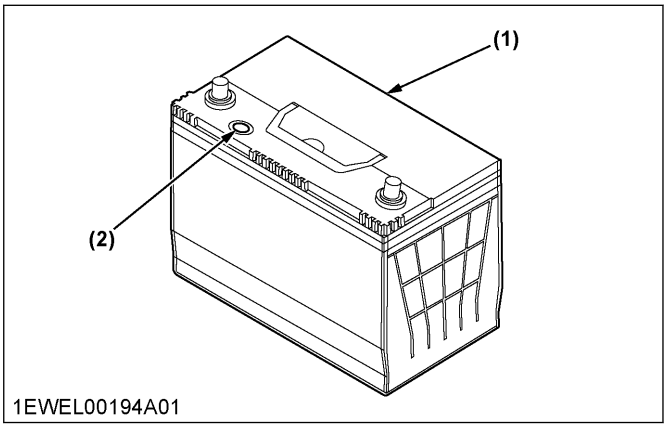

(1) Battery
(2) Indicator

3. Refer to the following table, and charge the battery if necessary.

State of indicator display	
Green	Specific gravity of electrolyte and quality of electrolyte are both in good condition.
Black	The battery needs charging.
White	The battery needs replacing.

NOTE :
- **The factory-installed is a non-refillable type battery. If the indicator turns white, do not quick-charge the battery but replace it with a new one.**

3.1 Charging the battery

⚠ WARNING
To avoid personal injury or death:

- **When the battery is being activated, hydrogen and oxygen gases in the battery are extremely explosive. Keep open sparks and flames away from the battery at all times, especially when charging the battery.**
- **When charging battery, make sure that battery vent plugs are secured.**
- **When disconnecting the cable from the battery, start with the negative terminal first.**
  When connecting the cable to the battery, start with the positive terminal first.
- **Do not check battery charge by placing a metal object across the terminals.**
  Use a voltmeter or hydrometer.

IMPORTANT :
- **Make sure that each electrolyte level is to the bottom of vent wells. If necessary, add distilled water in a well-ventilated area.**
- **The water in the electrolyte evaporates during recharging. Liquid shortage damages the battery.**
  Excess liquid spillage damages the machine.

NOTE :
- **A boost charge is only for emergencies. It will partially charge the battery at a high rate and in a short time.**
  When using a boost-charged battery, it is necessary to recharge the battery as early as possible.
  Failure to do this will shorten the battery's service life.
- **When exchanging an old battery for a new one, use a battery of equal specification.**

1. To slow-charge the battery, connect the battery positive terminal to the charge positive terminal and the negative to the negative.
2. Charge the battery in the standard fashion until the specific gravity of electrolyte falls between 1.27 and 1.29, meaning that the charge is complete.

4. Greasing the swivel bearing teeth

1. Pump grease with the grease gun through the grease fitting.
2. Grease the fitting at each 90° position of the swivel frame.

NOTE :
- **Fill with approximately 50 g of grease, meaning approximately 20 to 30 pumps with the grease gun at each position.**
- **Distribute the grease over the teeth.**

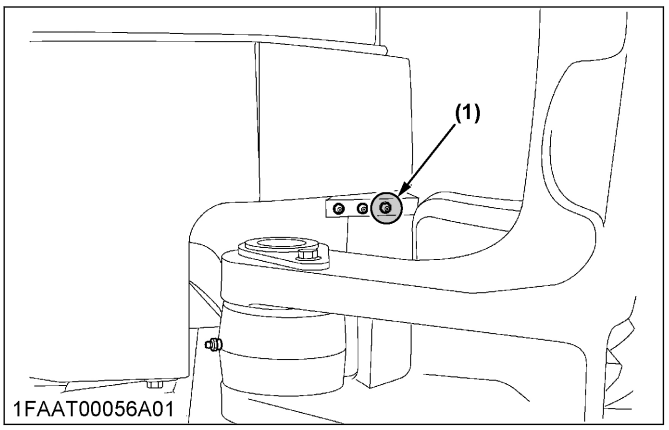

(1) Grease fitting (for swivel bearing teeth)

5. Checking the tracks

1. Check the track tension every 50 hours.
   (See ADJUSTING THE TRACKS on page 123.)

EVERY 100 SERVICE HOURS

1. Greasing the boom swing fulcrum

1. Grease the marked grease fittings shown by the arrows in the following illustration.

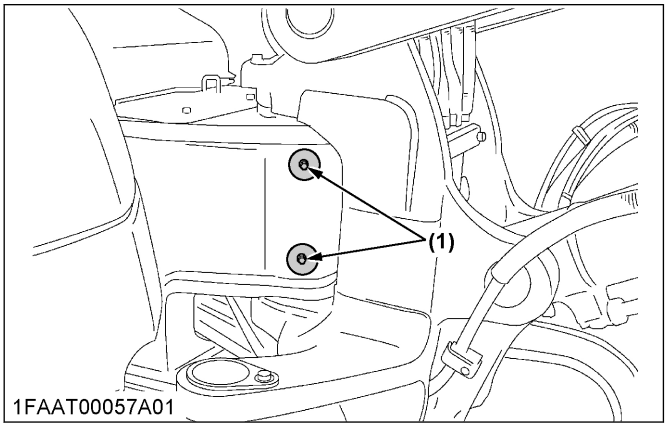

(1) Boom swing fulcrum

EVERY 150 SERVICE HOURS

1. Cleaning the air conditioner filter

⚠ WARNING
To avoid personal injury:
- **Wear eye protection when cleaning the air conditioner filter.**

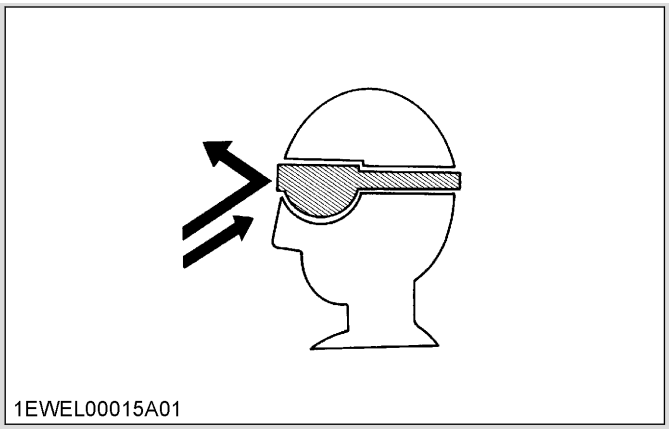

1. Open the cover under the operator's seat.
2. Remove the thumbscrew and the plate.
3. Remove the air conditioner filter.

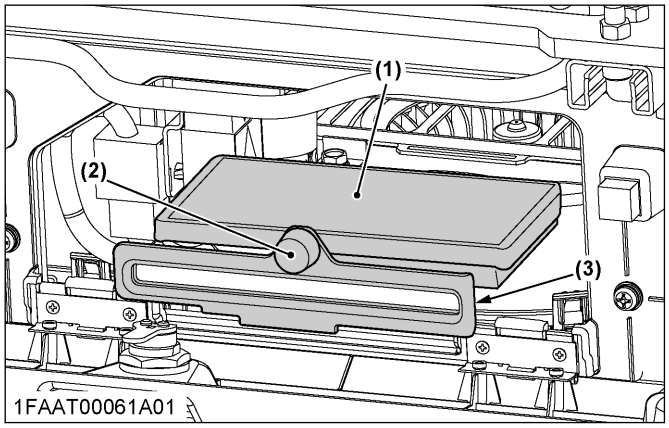

(1) Air conditioner filter
(2) Thumbscrew
(3) Plate

4. For normal use, blow air from the opposite direction to the filter's normal air flow.

Air pressure	205 kPa (2.1 kgf/cm^2) or less

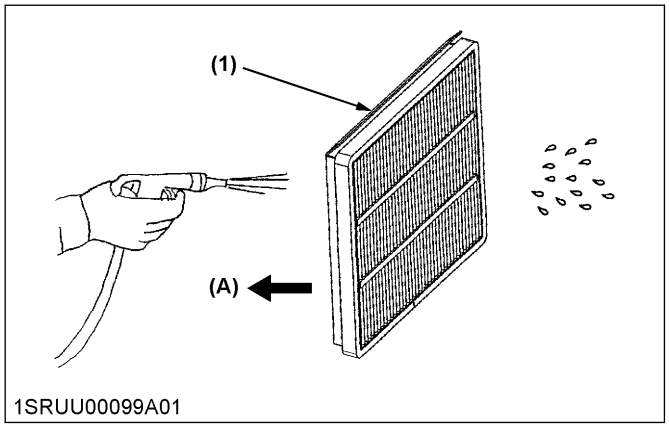

(1) Air conditioner filter *(A) Air conditioner airflow*

IMPORTANT :
- **Do not hit the filter. If the filter becomes deformed, dust may enter the air conditioner, which may cause damage and malfunction.**
- **Set the filter with the cushion facing upward and the V-flap facing outward. Incorrect setting shortens the filter's service life.**

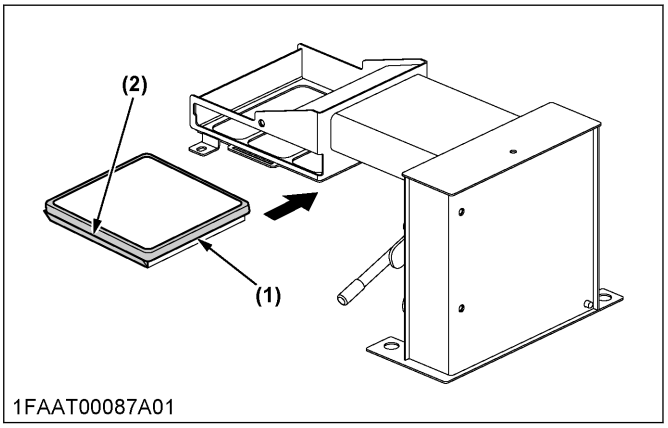

(1) Cushion
(2) V-flap

NOTE :
- **If the filter is very dirty, replace the air conditioner filter.**

EVERY 200 SERVICE HOURS

1. Adjusting the V-belt tension

⚠ WARNING
To avoid personal injury or death:
- **First, stop the engine.**
- **After servicing, put back the belt cover in its original position.**

1. Before adjusting the V-belt, remove the three bolts and detach the V-belt cover.
2. Adjust the alternator belt or the fan belt.
(See Checking and adjusting the alternator belt tension on page 107 or Checking and adjusting the fan belt tension on page 107.)

3. Attach the V-belt cover with the three bolts.
   Tightening torque must be between 3 N·m to 5 N·m.

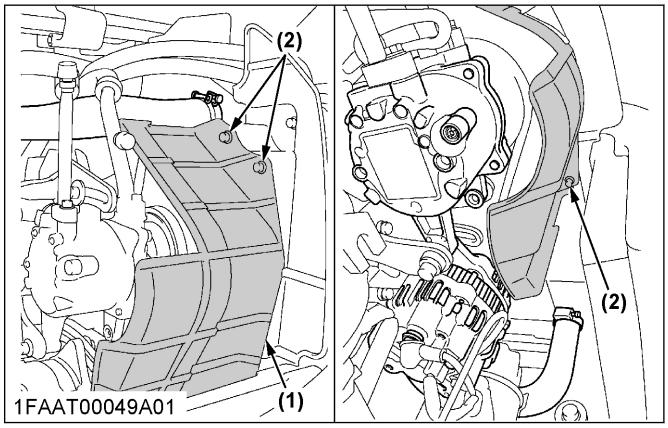

(1) V-belt cover
(2) Bolt

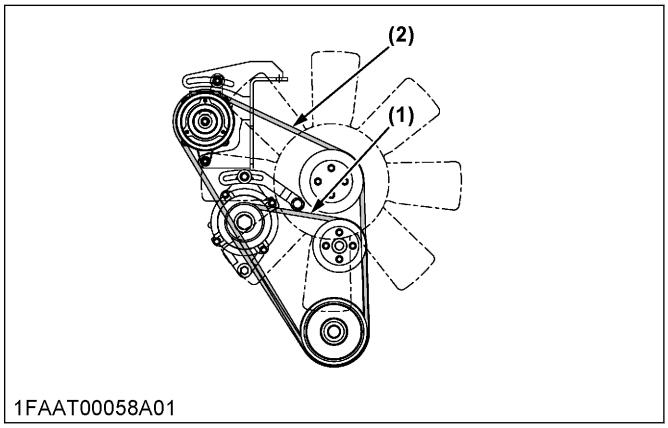

(1) Alternator belt
(2) Fan belt

1.1 Checking and adjusting the alternator belt tension

IMPORTANT :

- **If the engine is run with a loose alternator belt, the belt could slip and cause overheating of the engine or insufficient battery charging. Check the alternator belt tension regularly.**
- **If the alternator belt breaks or jumps off, the indicator light for battery charge will light up. Stop the engine immediately.**

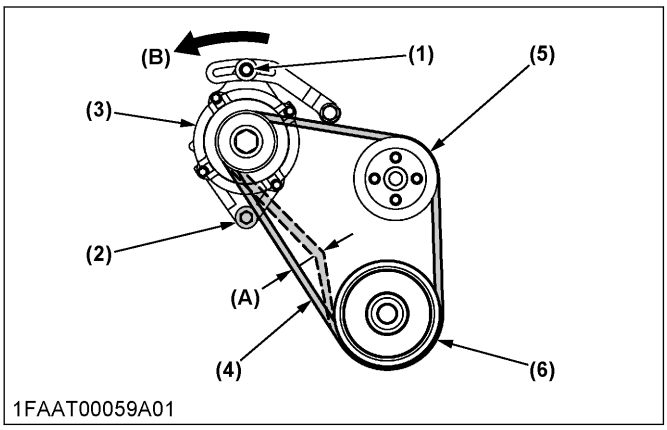

(1) Bolt
(2) Bolt
(3) Alternator
(4) Alternator belt
(5) Water pump
(6) Pulley
(A) about 10 mm
(B) Tighten

Checking

1. Press the alternator belt in the middle, with a force of approximately 10 kg.
   The belt tension is correct if it deflects about 10 mm.
2. Replace the alternator belt if worn out, cracked, or torn.

Adjusting

1. Loosen bolts (1) and (2).
2. Shift the alternator (3) in the direction shown by the arrow (B).

1.2 Checking and adjusting the fan belt tension

IMPORTANT :

- **If the engine is run with a loose fan belt, the belt could slip and cause insufficient room temperature control. Check fan belt tension regularly.**

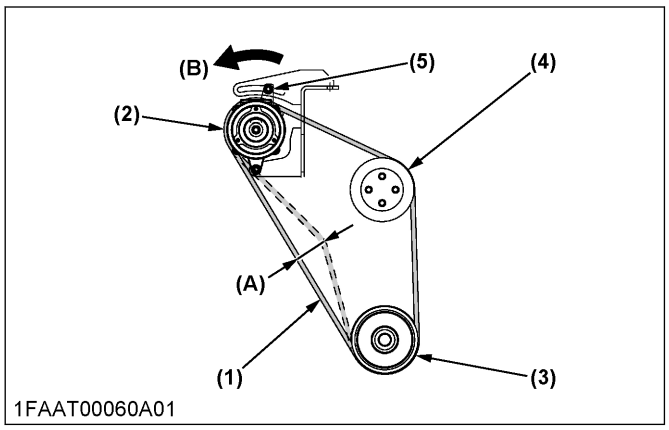

(1) Fan belt
(2) AC compressor
(3) Pulley
(4) Fan pulley
(5) Bolt and nut
(A) 12 mm to 15 mm
(B) Tighten

Checking

1. Press the fan belt in the middle, with a force of approximately 7 kgf.
   The belt tension is correct if it deflects about 12 mm to 15 mm.
2. Replace the fan belt if worn out, cracked or torn.

Adjusting

1. Loosen the bolt.
2. Shift the AC compressor in the direction shown by the arrow (B).

2. Checking the radiator hoses and clamps

Check the radiator hoses and clamps every 200 hours or every 6 months, whichever comes first.

⚠ WARNING

To avoid personal injury or death:

- **Wait long enough for the radiator coolant to cool down.**

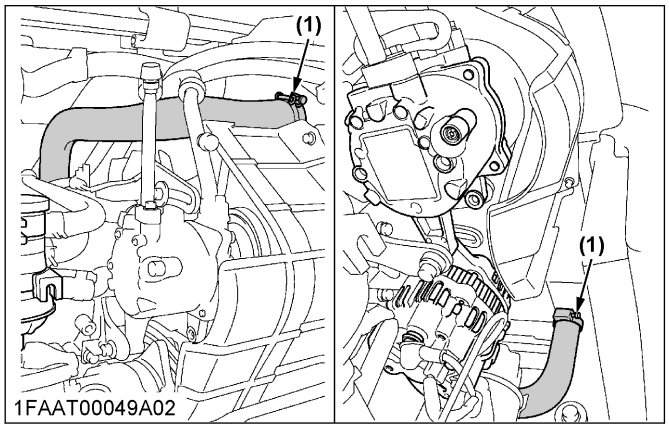

(1) Radiator hose and clamp (Both sides)

1. Check the coolant hoses for proper connection.
2. If the hose clamps become loose or if coolant leaks, tighten the hose clamps properly.
3. If the radiator hoses become swollen, worn out, or cracked, they must be replaced and the hose clamps must be tightened again properly.

3. Greasing the swivel bearing

1. Pump grease with a grease gun through the grease fitting indicated in the following illustration.
2. Grease at each 90° position of the swivel frame.

NOTE :

- **Apply 5 shots with a grease gun at each position.**

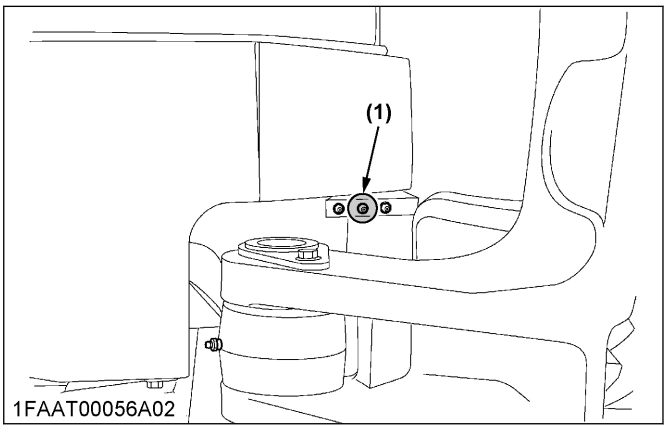

(1) Grease fitting

4. Inspecting and cleaning the air filter element

⚠ WARNING

To avoid personal injury:

- **Wear eye protection when cleaning the air filter element.**

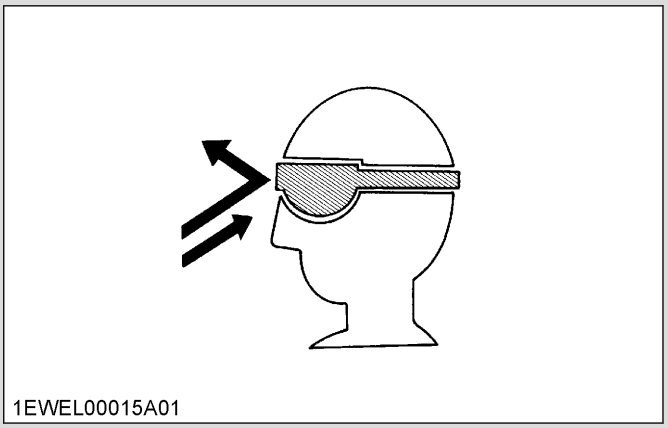

IMPORTANT :

- **Should the machine be used in extremely dusty areas, the air filter element must be inspected**

and cleaned more frequently than instructed in the specified maintenance periods.
- **The air filter has a dry element so keep it free from oil.**
- **Do not run the engine without the air filter.**
- **Clean the air cleaner element regularly or foreign matters will be accumulated, which will make the DPF longevity shorter than expected and the cleaning efficiency of the DPF will be reduced.**

NOTE :
- **The quickest and safest method of maintenance is to replace the air filter element with a new one.**

1. Open the engine hood and remove the dust cover. (See Opening and closing the engine hood on page 95.)
2. Remove only the outer element.

   NOTE :
   - **Do not remove the inner element.**

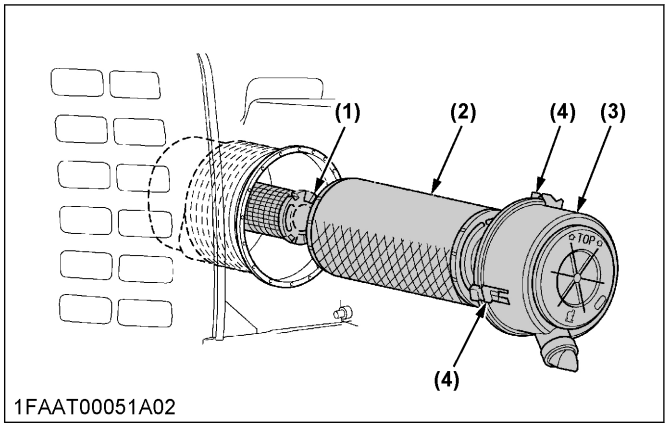

1FAAT00051A02

(1) Inner element
(2) Outer element
(3) Dust cover
(4) Clamps

3. Clean the interior of the element case as follows:
   a. Blow off any dust attached to the outside of the air filter element using compressed air.
   b. Blow the air filter element clean from inside to outside until the dust deposits are noticeably reduced.

Air pressure	205 kPa (2.1 kgf/cm^2) or less

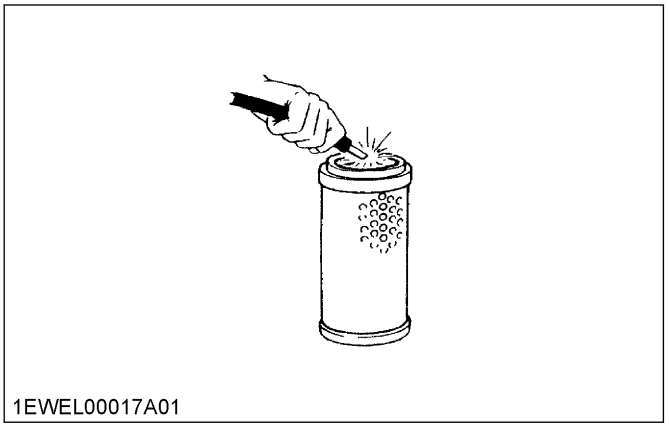
1EWEL00017A01

IMPORTANT :
- **If the air suction is still inadequate, or the color of the exhaust gases is abnormal even after the cleaning, the air filter element must be replaced.**

4. Reassemble the air filter element taking care to install the dust cover so that the *"TOP"* mark (arrow) points upwards.

5. Checking the fuel line

1. Check that all hoses and clamps are tightened and not damaged.

2. If any of them are found worn or damaged, replace or repair them at once.

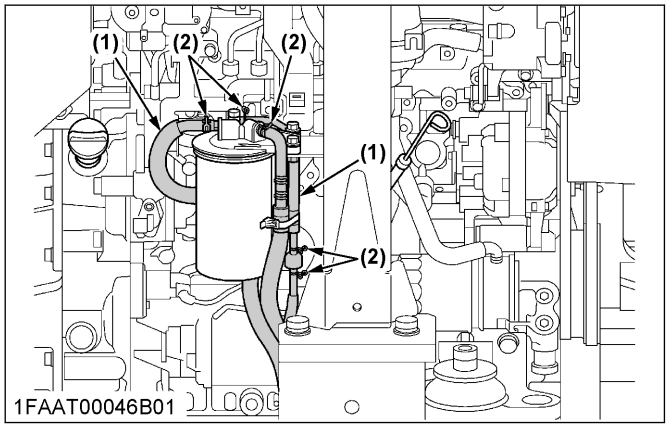

(1) Fuel line
(2) Clamp band

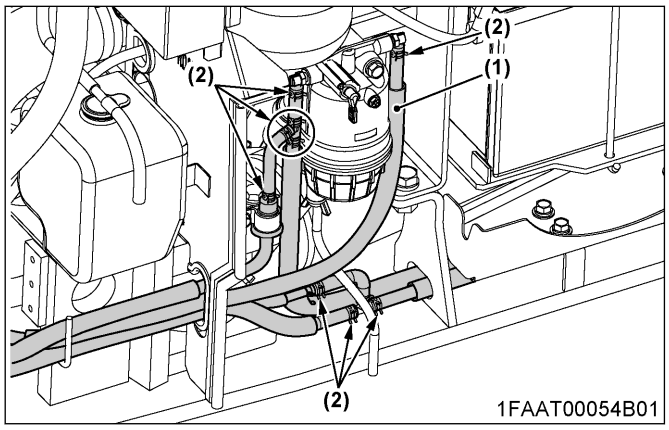

(1) Fuel line
(2) Clamp band

6. Checking the intake air line

1. Check that all hoses and hose clamps are tightened and not damaged.
2. If any of them are found worn or damaged, replace or repair them at once.

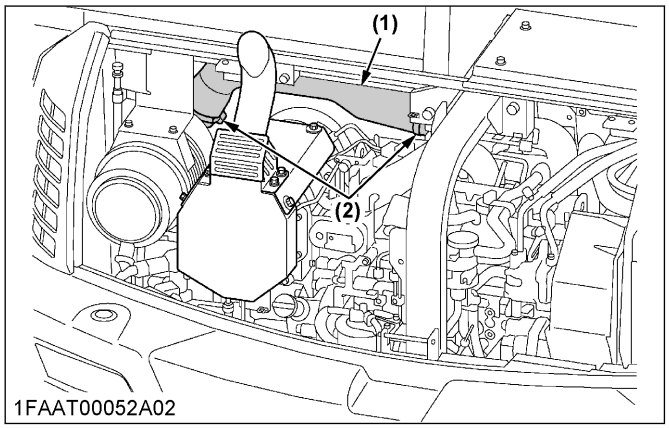

(1) Hose
(2) Clamp band

7. Checking the air conditioner condenser

- Check the air conditioner condenser to make sure it is clean from debris.

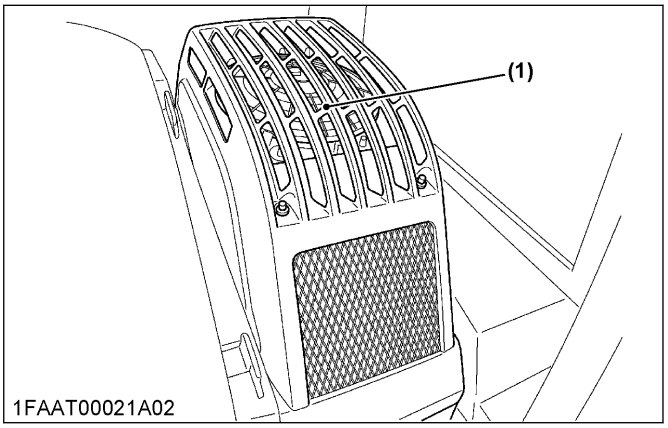

(1) Air conditioner condenser

EVERY 250 SERVICE HOURS

1. Greasing the front attachments (not including the bucket pin and the boom swing fulcrum)

⚠ WARNING

To avoid personal injury or death:

- **First lower all attachments on the ground then stop the engine.**
- **While greasing, take care not to step on the bucket teeth.**

IMPORTANT :

- **When doing excavation work in water, generously grease the following points. After finishing the work, grease again.**

1. Grease the marked grease fittings shown by arrows in the following illustrations.

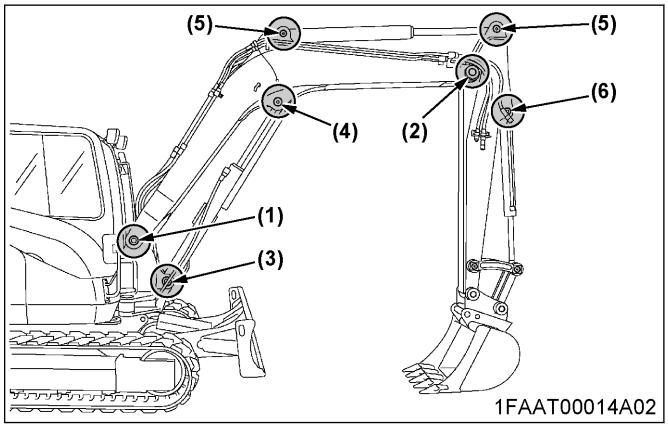

(1) Boom bottom linkage
(2) Arm bottom linkage
(3) Boom cylinder boss
(4) Boom cylinder pin
(5) Arm cylinder pin
(6) Bucket cylinder pin

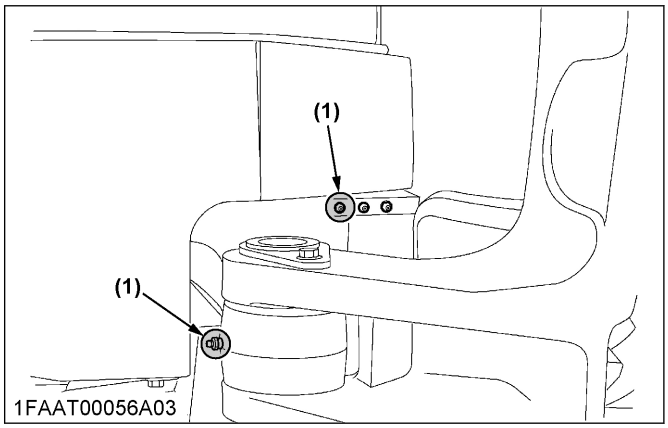

(1) Swing cylinder boss

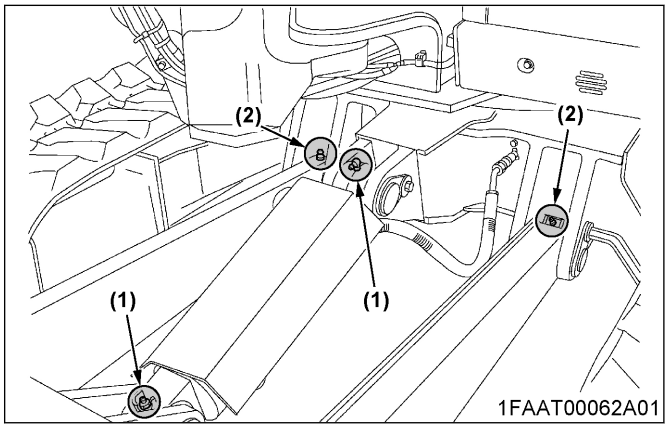

(1) Dozer cylinder boss
(2) Dozer linkage boss

2. Greasing the pilot valve linkage

1. Apply grease to the pushrods, the contact surface of the plate, and the universal joint.

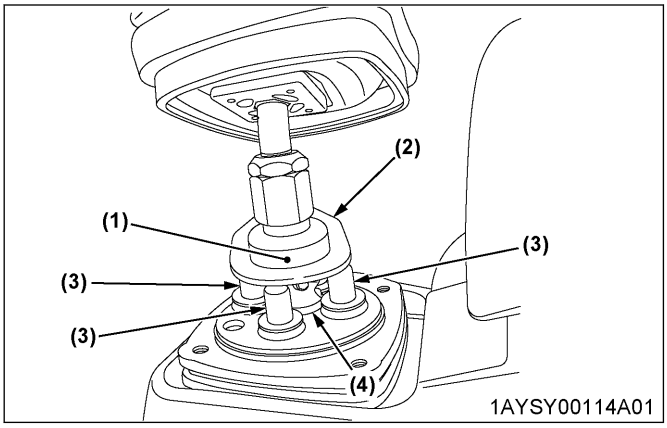

(1) Pilot valve
(2) Plate
(3) Pushrod
(4) Universal joint

NOTE :
- **Apply grease to both the left and right pilot valves.**

3. Changing the engine oil

The first oil change is after 50 service hours.
Change the engine oil every 250 hours or every 6 months, whichever comes first.

⚠ WARNING
To avoid personal injury:
- **First, stop the engine and then wait long enough for the oil to cool down.**

IMPORTANT :
- **Regardless of the service hours, the engine oil change is due every 6 months.**
- **Use engine oil API service classification CJ-4 or CK-4.**

1. Remove the drain plug on the underside of the engine, and drain the oil completely.
2. Retighten the drain plug.

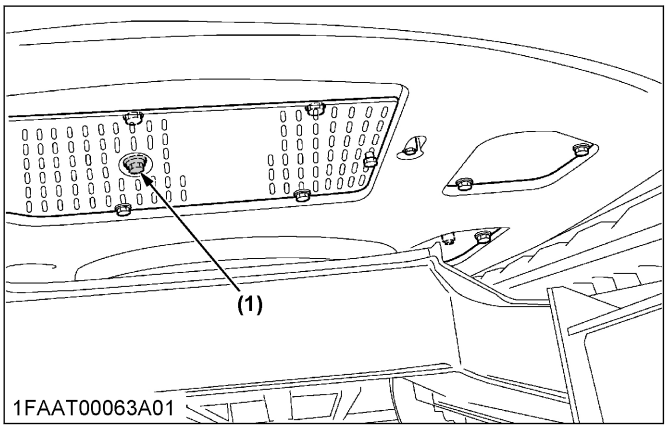

(1) Drain plug

3. Fill up with new oil through the filing port up to the specified level.

Engine oil volumes (with engine oil filter)	9.7 L

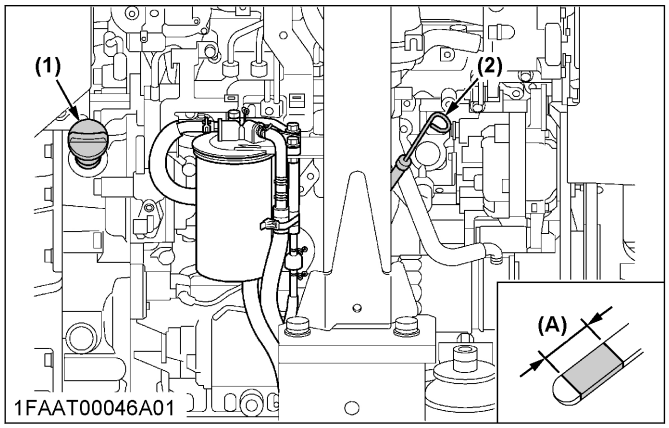

(1) Oil filing port
(2) Engine oil dipstick
(A) Required oil level range

4. Let the engine idle for approximately 5 minutes.
5. Check the engine oil level by inserting the engine oil dipstick completely into the respective port opening and then pulling the dipstick out. If the oil level lies between the two markings, do not add any additional oil.

4. Replacing the engine oil filter cartridge

The first replacement is after 50 service hours.
Replace the engine oil filter cartridge at the same time as replacing the engine oil every 250 hours or every 6 months, whichever comes first.

IMPORTANT :
- **Always check the oil level after exchanging the filter.**

1. Remove the cartridge with the supplied filter wrench.

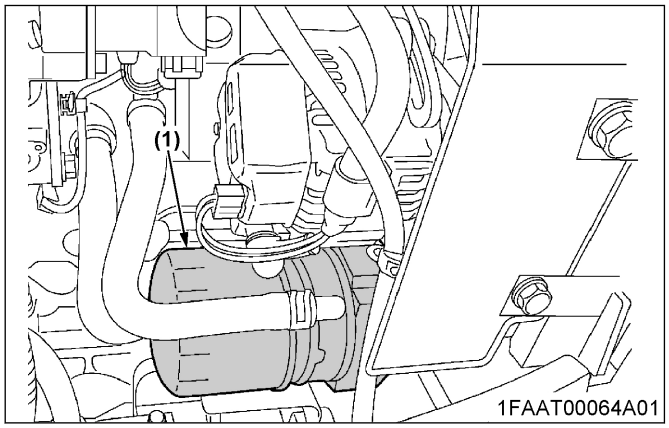

(1) Oil filter

2. Oil the O-ring of the new oil filter cartridge lightly. Then tighten the oil filter cartridge by hand.
3. Fill engine oil to the specified level.

Engine oil volumes (with engine oil filter)	9.7 L

4. Let the engine run for approximately 5 minutes and make sure that the engine oil indicator lamp does not light up.
5. Stop the engine.
6. As the engine oil level is reduced by the amount of the filter capacity after the engine is started, add oil as necessary.

EVERY 500 SERVICE HOURS

1. Replacing the water separator filter element

1. Remove the connector of water level sensor.
2. Set the shutoff-valve to the **[OFF]** position.
3. Loosen and completely remove the cup.
4. Replace the filter element.
5. Check the condition of the O-ring and replace if necessary.
6. Fully tighten up the cup.
7. Set the shutoff-valve to the **[ON]** position.
8. Install the connector of water level sensor.

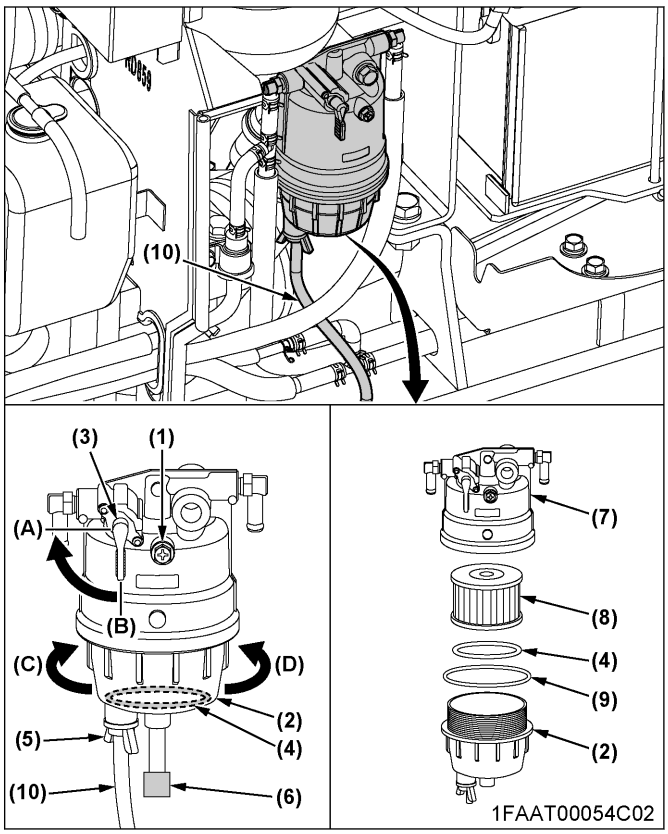

(1) Screw
(2) Cup
(3) Shutoff-valve
(4) Float
(5) Drain plug
(6) Connector of water level sensor
(7) Head cover
(8) Filter element
(9) O-ring
(10) Hose
(A) OFF
(B) ON
(C) Loosen
(D) Tighten

IMPORTANT :
- **Users must take appropriate actions to insure fuel is not contaminated during the operation.**
- **If water or fuel is spilled, wipe around the water separator.**
- **Purge the fuel system before restarting the machine.**
  (See PURGING THE FUEL SYSTEM on page 123.)

2. Changing the travel motor gear oil

The first oil change is after 50 service hours.

⚠ CAUTION
To avoid personal injury:
- **Lower all attachments to the ground, and stop the engine before undertaking the oil change.**

NOTE :
- **The normal oil change period is every 500 hours.**
- **Change the oil at least once a year.**

1. Rotate the track so that the drain plug of the travel motor is in the bottom position.
2. Remove the drain plug to let the oil run out.
3. Screw in and tighten the drain plug again and fill gear oil through the oil filling port.

Gear oil volume	Approximately 1.35 L

NOTE :
- **Use prescribed gear oil SAE 90.**

4. Fill oil until it overflows from the oil check port.

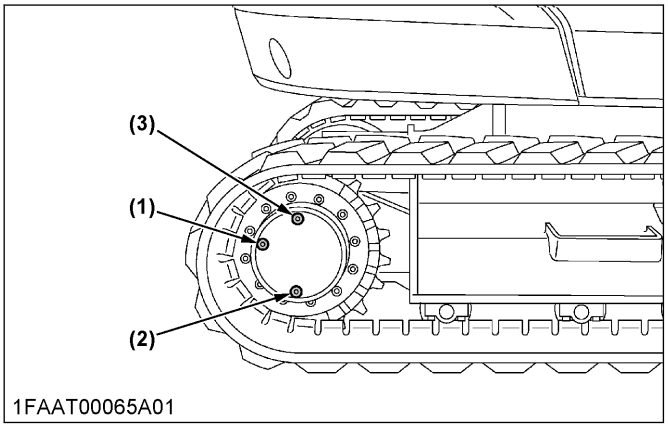

(1) Oil check port
(2) Drain plug
(3) Oil filling port

3. Replacing the fuel filter cartridge

Replace the fuel filter cartridge every 500 hours or every year, whichever comes first.

⚠ WARNING
To avoid personal injury or death:
- **Open flames may ignite fuel. Keep flames away while working on the fuel system.**

1. Remove the filter with the filter wrench.

2. Apply a light film of fuel to the seal of the new filter and fix it tightly into position by hand.

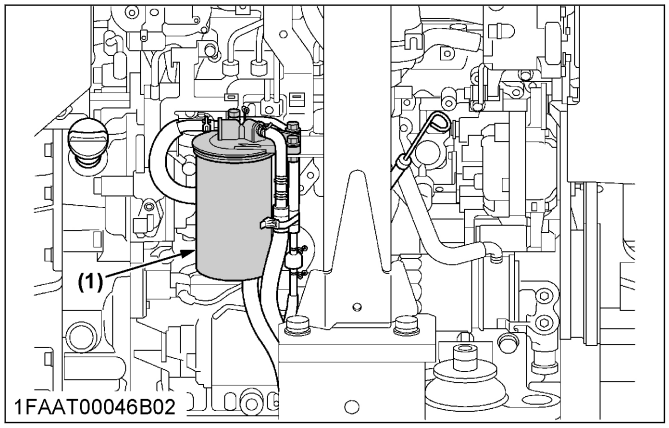

(1) Fuel filter cartridge

IMPORTANT :
- **After replacing the filter, the fuel system must be purged of air.**
- **Do not add any fuel into the new filter cartridge before installing it. Debris in fuel can damage the engine.**
- **If you do not replace the fuel filter cartridge regularly, the cleaning efficiency of the DPF will be reduced and the DPF longevity will be shorter than expected.**
- **Users must take appropriate actions to insure fuel is not contaminated during the operation.**
  If fuel is spilled, wipe around the filter.

4. Replacing the hydraulic return filter cartridge

The first replacement is after 250 service hours.

⚠ WARNING
To avoid personal injury:
- **Remove the oil filter element only after the oil in the hydraulic tank has cooled down.**
- **The oil may spurt out if plugs or filters are removed before releasing the pressure in the hydraulic system.**
  Gradually loosen the oil filling plug on the tank to release the pressure in the tank.

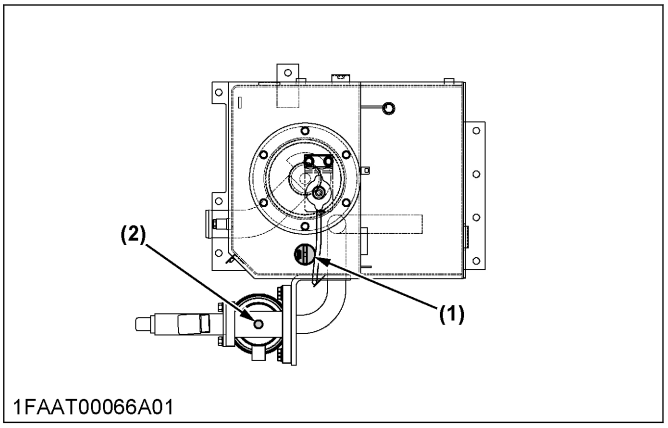

(1) Oil filling plug
(2) Air plug

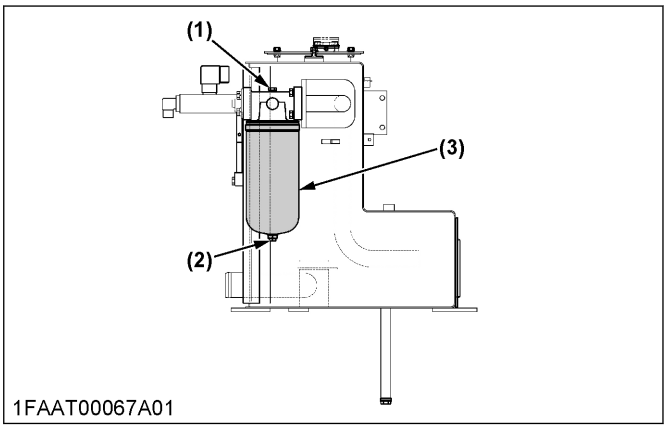

(1) Air plug
(2) Drain plug
(3) Filter cartridge

1. Gradually loosen the oil filling plug on the tank to release pressure in the tank.
2. First loosen the air plug, then remove the drain plug to let the oil in cartridge run out.
3. Remove the cartridge with wrench.
4. Apply a light film of oil to the seal of the new cartridge and turn in tightly by hand.
5. Re-tighten the air plug.

IMPORTANT :
- **Always check the oil level after replacing the filter.**
- **Users must take appropriate actions to insure hydraulic oil is not contaminated during the operation.**
  If spilled, wipe around the filter.

EVERY 1000 SERVICE HOURS

1. Replacing the hydraulic pilot filter element

⚠ WARNING
To avoid personal injury or death:

- **Before replacing the element, wait long enough for the hydraulic fluid to cool down.**
- **Use an oil tray to prevent oil from scattering on the muffler.**

1. Remove the rear left cover.

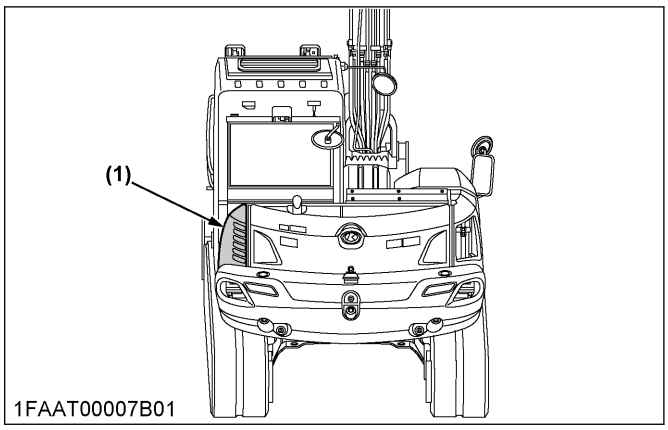

(1) Rear left cover

2. Gradually loosen the oil filling plug on the tank to release the pressure from the hydraulic system.
3. Remove the pilot filter case from the head cover.
4. Wrench and pull out the element downward.
5. Replace the o-ring with a new one.
6. Apply a light coating of clean hydraulic oil to the o-ring and fit it to the case firmly. Be careful not to scratch the o-ring.
7. Fit the case to the head cover.
8. Let the engine run for approximately 3 minutes.
9. Check the oil level of the hydraulic oil tank, and then tighten the oil filling plug.

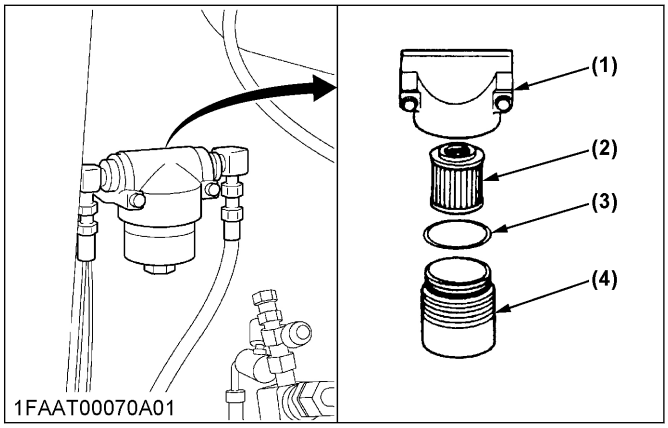

(1) Head cover
(2) Element
(3) O-ring
(4) Case

IMPORTANT :
- **Users must take appropriate actions to insure hydraulic oil is not contaminated during the operation.**
  If hydraulic oil is spilled, wipe around the filter.

2. Changing the hydraulic oil

This operation includes the replacing of the suction filter in the hydraulic tank.

⚠ WARNING
To avoid personal injury or death:
- **Wait long enough for the hydraulic fluid to cool down. Then, begin replacing the hydraulic fluid.**
- **Use stepladder to work safely when the suction filter is extracted from the oil tank.**

IMPORTANT :
- **Users must take appropriate actions to insure hydraulic oil is not contaminated during the operation.**
  If hydraulic oil is spilled, wipe around the filter.

1. Park the machine on a firm, flat and level surface.
2. Lower the attachments and dozer blade to the ground and stop the engine.

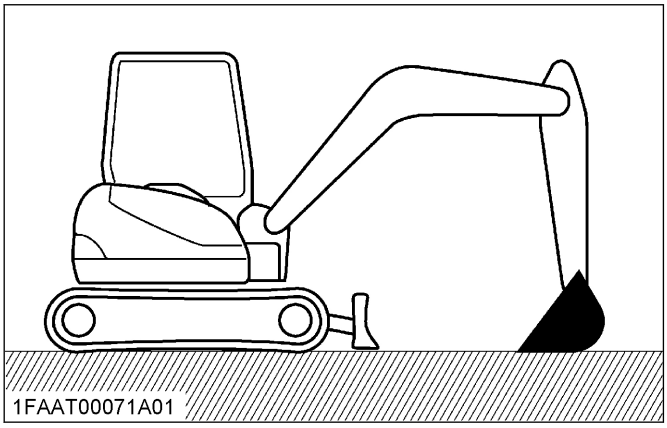

3. Gradually loosen oil filling plug on the tank to release pressure in the tank.
4. Remove the drain plug on the underside of the hydraulic tank and drain the oil.
5. Remove the hydraulic tank cover.
6. Remove and exchange the suction filter.

7. Retighten the drain plug.

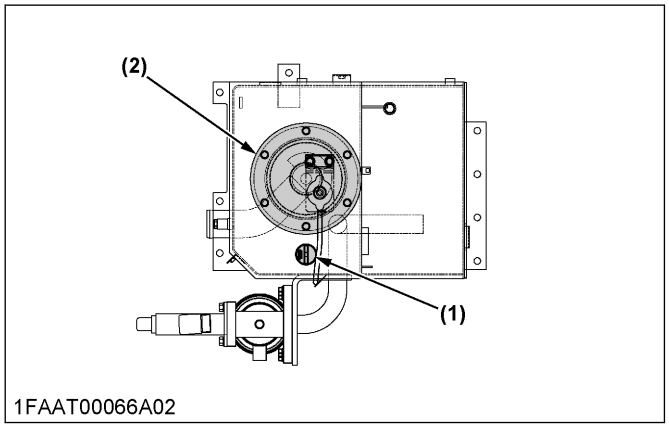

(1) Oil filling plug
(2) Hydraulic tank cover

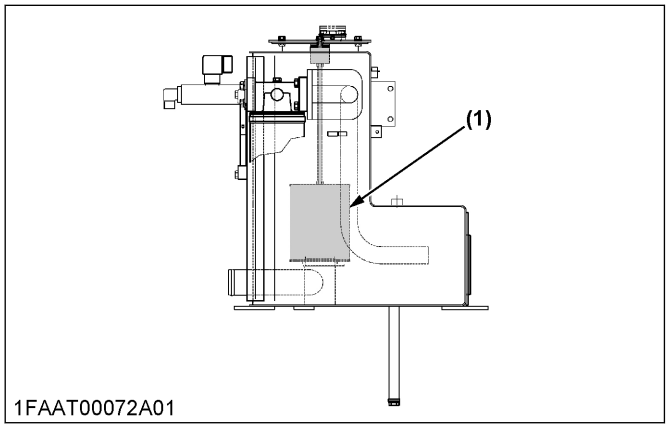

(1) Suction filter

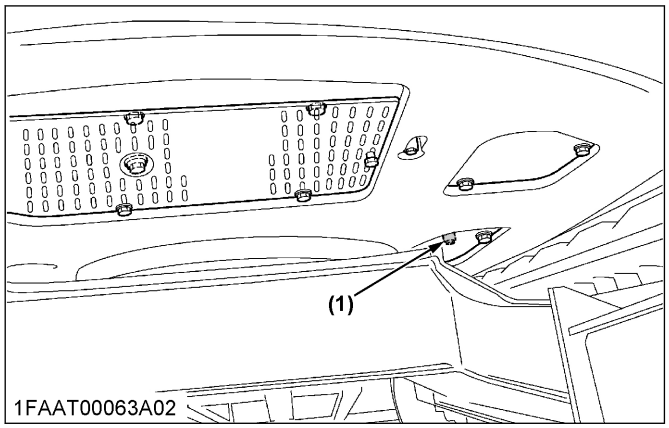

(1) Drain plug

8. Fill with oil through the oil filling opening on the top side of the tank.
9. Let the engine run and operate the boom, arm, bucket, and boom swing device.
10. Bring the boom to the highest position, pull in the arm, crowd the bucket, and swing the boom to the left end.

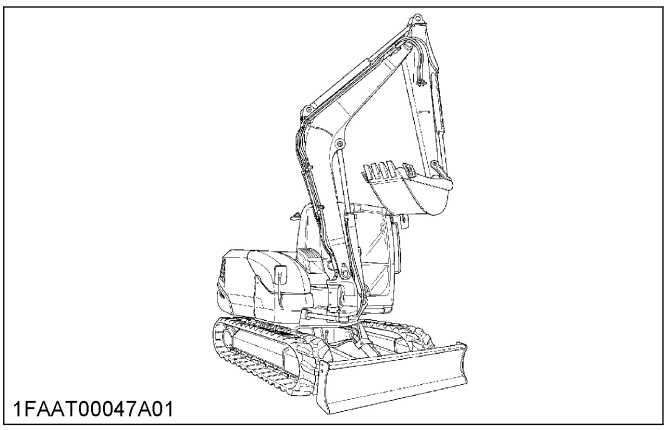

11. Fill oil again up to the center of the gauge.

Hydraulic oil volume	Hydraulic tank	75 L
	Whole oil volume	155.5 L

12. Install the hydraulic tank cover and tighten the oil filling plug.

IMPORTANT :
- **If hydraulic oil is spilled, wipe around the hydraulic tank.**

3. Checking the hydraulic oil (hydraulic hammer operation)

The hydraulic oil change after 1000 operating hours in the operator's manual is based on a standard machine. The following inspection measures are valid when a hydraulic hammer is used:

Changing and filling up with hydraulic oil
- The hydraulic oil must be changed more often when a hydraulic hammer is used because the machine is subject to harder conditions than standard excavating work.
- Use only the recommended oils mentioned in the operator's manual when changing or filling with oil.
- When filling up with oil, do not mix oils of different brands.

Replacing the return filter and oil
- The filter must be replaced more often because of contamination resulting from the frequent assembly and disassembly of the hoses.
- Use the correct replacement filter.
- Change the oil according to operating hours.

		Hydraulic oil	Return filter
Normal work		Every 1000 hrs	Every 500 hrs (250 hrs after first operation)
Hammer work proportion	20 % or more	Every 800 hrs	Every 200 hrs
	40 % or more	Every 400 hrs	
	60 % or more	Every 300 hrs	Every 100 hrs
	80 % or more	Every 200 hrs	

4. Cleaning the pilot line filter

Dust and dirt collect on the concave side of the filter.

IMPORTANT :
- **To avoid oil leakage, do not reuse removed O-rings during reassembly.**

1. Clean the pilot line filter by bleeding the cleaning fluid from the salient side.
2. Clean the pilot line filter on the other side in the same manner.

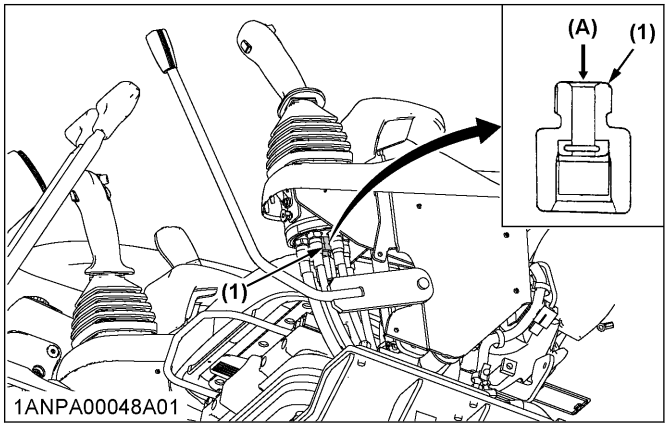

(1) Pilot line filter
(A) Direction of bleeding the cleaning fluid

5. Checking the engine valve clearance

Contact your local Kubota dealer for this service.

EVERY 1000 SERVICE HOURS OR ONCE A YEAR

1. Replacing the air filter element

⚠ WARNING
To avoid personal injury or death:
- **Before replacing the air filter, stop the engine.**

IMPORTANT :
- **Replacement of the air filter components may be required when the machine is used in extreme conditions.**
- **Replace the air cleaner element regularly or foreign matters will accumulate, which will shorten the life expectancy of the DPF and reduce the cleaning efficiency of the DPF.**

1. Open the engine hood and remove the dust cover.
2. Remove and replace the outer element and inner element with new elements.

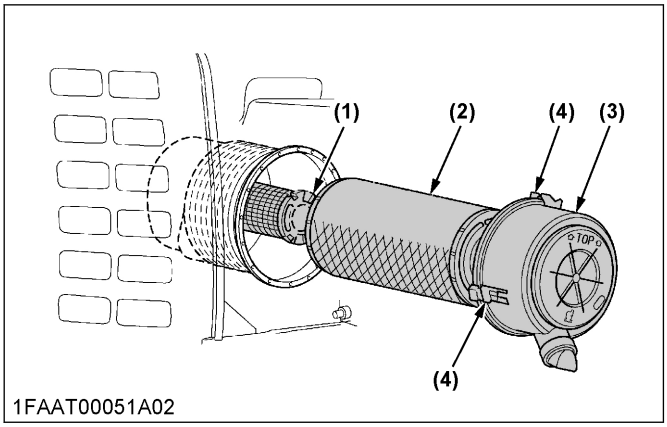

(1) Inner element
(2) Outer element
(3) Dust-cover
(4) Clamp

3. When reassembling, install the dust cover so that the *"TOP"* mark (arrow) points upward.

EVERY 1500 SERVICE HOURS

1. Checking the injector tip

Contact your local Kubota dealer for this service.

2. Replacing the oil separator element

⚠ WARNING
To avoid personal injury or death:
- **Stop the engine before replacing the oil-separator element.**

1. Remove the cover and remove the oil-separator element.
2. Wipe off the oil and the carbon in the case with a clean rag.
3. Fit a new oil-separator element and O-ring.

4. Tighten the cover until a cover comes in contact with body.

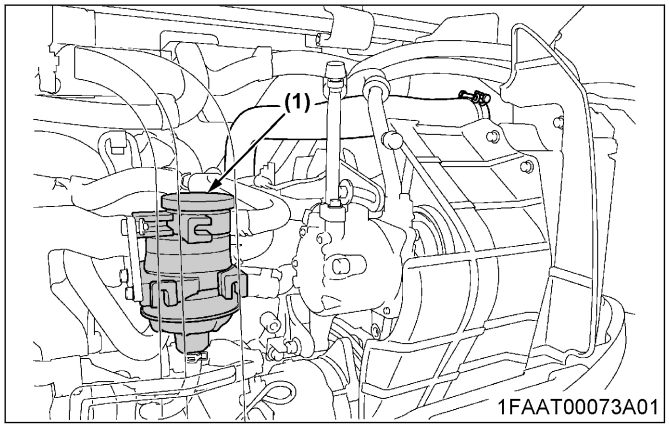

(1) Oil separator

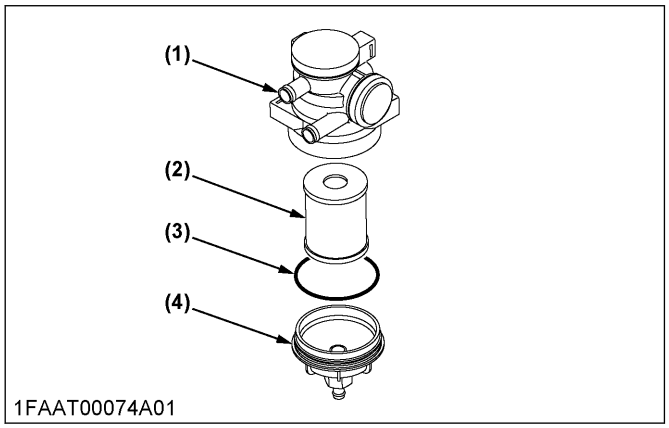

(1) Body
(2) Oil separator element
(3) O-ring
(4) Cover

3. Checking the EGR cooler

Contact your local Kubota dealer for this service.

EVERY 2000 SERVICE HOURS

1. Changing the front idler and track roller oil

Contact your local Kubota dealer for this service.

2. Checking the alternator and starter motor

Contact your local Kubota dealer for this service.

EVERY 3000 SERVICE HOURS

1. Checking the EGR system

Contact your local Kubota dealer for this service.

2. Checking the turbo charger

Contact your local Kubota dealer for this service.

ANNUAL SERVICING

1. Checking the electrical wiring and fuses

1. Check the terminals periodically for proper connections.

   NOTE :
   - **Loose wiring or damaged cables can cause improper functioning or short-circuiting of the electrical system.**

2. Check the wiring and replace any damaged components immediately.

   NOTE :
   - **If a fuse blows out soon after being replaced, contact your nearest Kubota dealer.**
   - **Never use a fuse other than the specified type.**

2. Checking the air conditioner pipes and hoses

⚠ WARNING
To avoid personal injury or death:
- **Do not touch the coolant hoses or the heater with your hand. You may get burned.**

1. Check to see that all lines and hose clamps are tight and not damaged.
2. If hoses and clamps are found worn or damaged, replace or repair them at once. Contact your local Kubota dealer for this service.

3. Checking the exhaust manifold (cracks, gas leakage, and mounting screw)

Contact your local Kubota dealer for this service.

4. Checking the intake air line for air leaks

Contact your local Kubota dealer for this service.

5. Checking the boost sensor

Contact your local Kubota dealer for this service.

6. Checking the air flow sensor

Contact your local Kubota dealer for this service.

7. Checking the DPF

Contact your local Kubota dealer for this service.

8. Checking the DPF differential pressure sensor and piping for gas leaks

Contact your local Kubota dealer for this service.

9. Checking the DPF exhaust gas temperature sensor

Contact your local Kubota dealer for this service.

10. Checking the EGR piping for gas leaks

Contact your local Kubota dealer for this service.

BIENNIAL SERVICING

1. Replacing the air conditioner pipes and hoses

⚠ WARNING

To avoid personal injury or death:

- **Do not touch the coolant hoses or the heater with your hand. You may get burned.**

- Replace the air conditioner pipes and hoses every 2 years.
- If the hoses or pipes become swollen, hard, or cracked before 2 years has passed, replace them immediately.
- Contact your local Kubota dealer for this service.

2. Replacing radiator hoses and hose clamps

⚠ WARNING

To avoid personal injury or death:

- **Do not loosen the radiator cap before the radiator has cooled down sufficiently. Loosen the cap only after allowing enough time for the pressure in the system to be reduced.**

- Replace the radiator hoses and hose clamps every 2 years.
- If the hoses or pipes become swollen, hard, or cracked before 2 years has passed, replace them immediately.

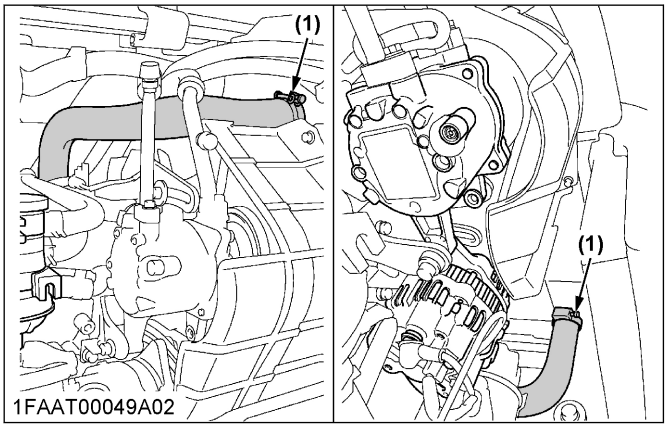

(1) Radiator hose and clamp (Both sides)

3. Changing the radiator coolant

⚠ WARNING

To avoid personal injury or death:

- **When using antifreeze, use protective clothing such as rubber gloves. Antifreeze is poisonous.**
- **If swallowed, antifreeze is poisonous to people, animals, and birds.**
- **If you accidentally swallowed antifreeze, seek medical attention immediately.**
- **When antifreeze comes in contact with the skin or clothing, wash it off immediately.**
- **Do not mix different types of antifreeze. The mixture can produce a chemical reaction resulting in harmful substances.**
- **Antifreeze is extremely flammable and explosive under certain conditions. Keep antifreeze away from fire and children.**
- **When draining fluids from the engine, use a container underneath the engine body to catch the fluids.**
- **Do not pour waste onto the ground, down a drain, or into any water source.**
- **Also, observe the relevant environmental protection regulations when disposing of antifreeze.**

1. Stop the engine, and then wait until the engine has cooled down completely.

2. Open the radiator cap.

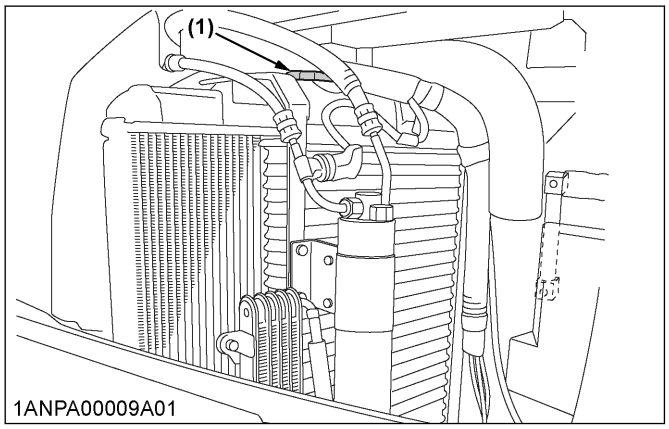

(1) Radiator cap

3. Open the drain plug at the bottom of the radiator and drain the coolant completely. Should a recovery tank be equipped, disconnect the line from the tank floor and then open the drain plug.

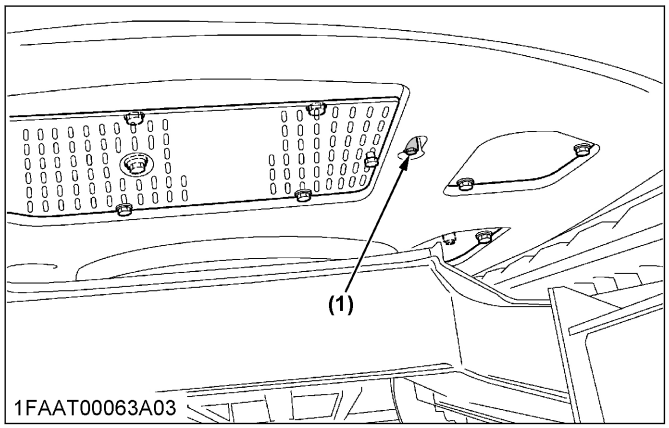

(1) Drain plug

4. Drain water while pouring water from the radiator water inlet.
5. Continue until clean water comes out of the outlet.
6. Close the drain plug.
7. Fill the radiator and the recovery tank with coolant fluid.
8. Let the engine idle for about 5 minutes, and then stop the engine.
9. Check the coolant level of the recovery tank and add coolant if necessary.

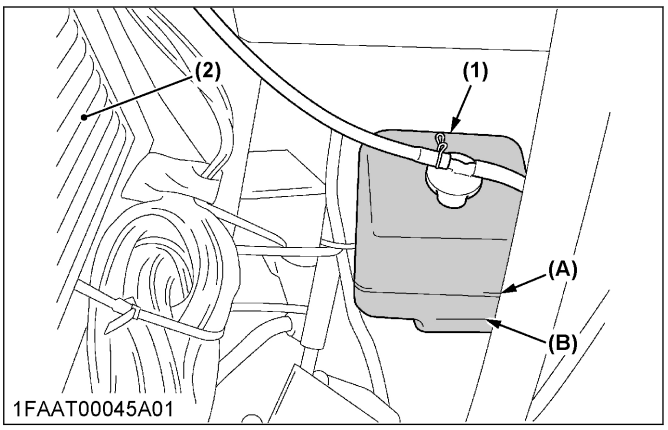

(1) Recovery tank
(2) Radiator
(A) FULL
(B) LOW

Radiator	10.5 L
Recovery tank	1.3 L

NOTE :
- **The shipped machine has been filled with 50 % antifreeze solution.**

IMPORTANT :
- **Do not operate the engine without coolant.**
- **To fill the radiator system and the recovery tank, use fresh water and antifreeze fluid.**
- **When the antifreeze is mixed with water, the antifreeze mixing ratio must be less than 50 %.**
- **Tighten the radiator cap properly. If the cap is loose or not properly fitted, it can cause engine overheating due to the loss of coolant fluid.**

4. Replacing the fuel line

Replace the hoses and clamps.
(See Checking the fuel line on page 109.)

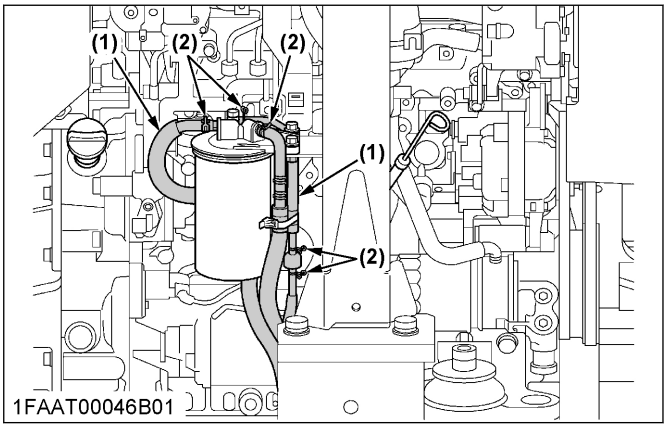

(1) Fuel line
(2) Clamp band

IMPORTANT :
- **Replace all the fuel lines not only illustrated but also connected to the fuel tank, water separator, fuel filter, fuel cooler and so on, and clamps of them.**

5. Replacing the intake air line

Replace the hoses and clamps, if necessary.
(See Checking the intake air line on page 110.)

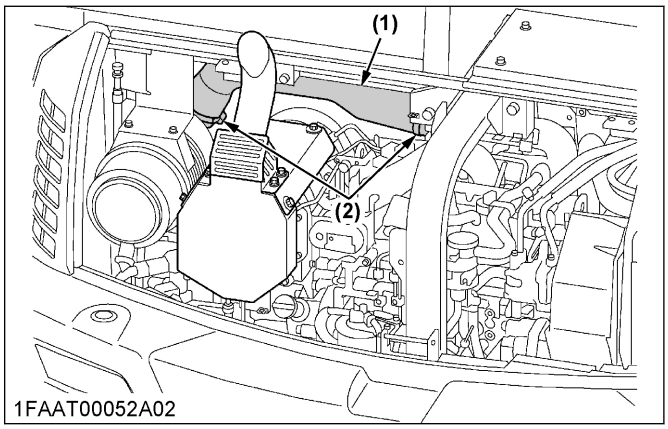

(1) Hose
(2) Hose clamp

6. Replacing the oil separator rubber hose

Contact your local Kubota dealer for this service.

7. Replacing the DPF differential pressure sensor rubber piping (front and back)

Contact your local Kubota dealer for this service.

8. Replacing the suction pipe downstream the air flow sensor

Contact your local Kubota dealer for this service.

9. Replacing the boost sensor pressure rubber piping

Contact your local Kubota dealer for this service.

10. Replacing the EGR cooler hose

Contact your local Kubota dealer for this service.

11. Replacing the hydraulic hoses

Contact your local Kubota dealer for this service.

SERVICING AS REQUIRED

1. Checking the refrigerant (gas)

⚠ WARNING
To avoid personal injury or death:
- **The contact of liquid with eyes or skin may cause frostbite.**
- **In case of leakage, wear safety goggles. Escaping refrigerant can cause severe injuries to eyes.**
- **When in contact with fire, the R134a refrigerant releases a toxic gas.**
- **Do not disconnect any parts of the refrigeration circuit of the air conditioning system. Contact your local Kubota dealer for assistance and service.**

A shortage of refrigerant reduces the air conditioner performance. Check the following points. If it is indicated that the amount of refrigerant is extremely low, ask your dealer to inspect and refill.

Checking procedure
1. Run the air conditioner in the following conditions:
   - Engine speed at about 1500 rpm
   - Temperature control lever at the maximum cooling position (leftmost)
   - Fan switch at the highest blow (3)
   - Air conditioner switch at the *“ON”* position

2. Look into the sight glass to see if the refrigerant is flowing through its circuit.

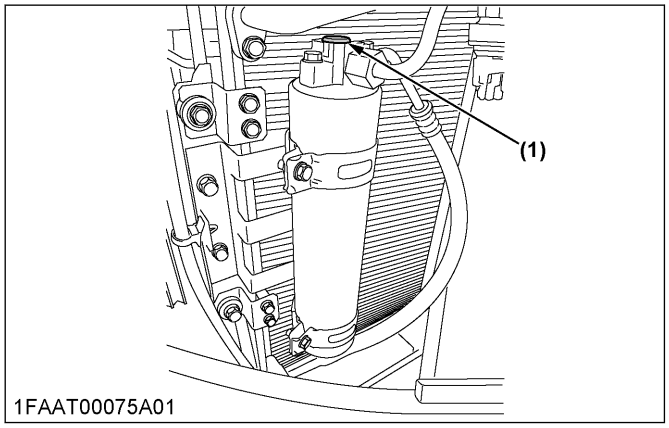

(1) Sight glass

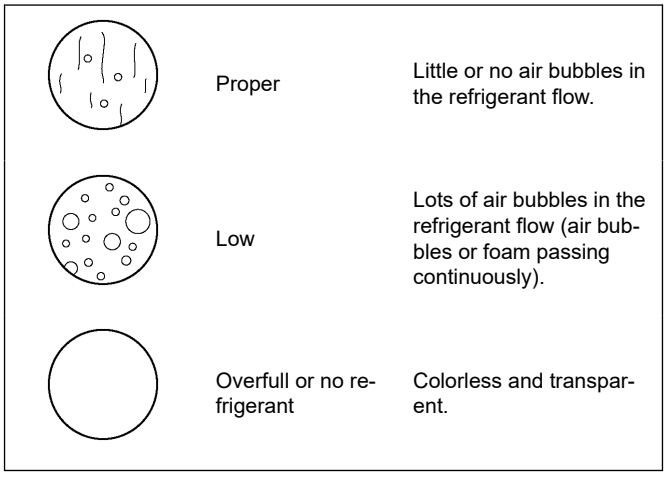

IMPORTANT :

- **Charge only with R134a, not R12 refrigerant (gas).**

2. Draining the water separator

If the following fuel filter water error message appears on the display, immediately drain the water separator. (See Cleaning the water separator on page 103.)

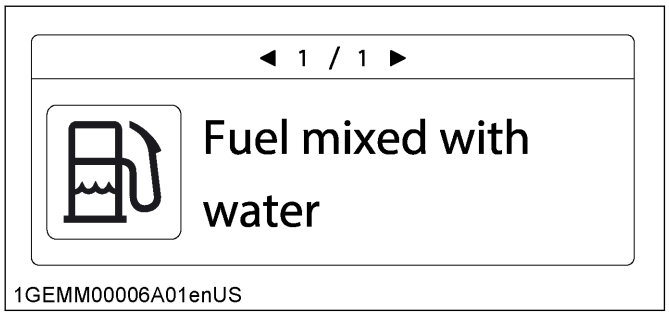

IMPORTANT :

- **If you do not drain the water separator immediately after the alarm, the engine may be seriously damaged.**
- **Without the water separator drained, the cleaning efficiency of the DPF will be reduced and the DPF longevity will be shorter than expected.**

3. Cleaning the DPF

The longer the DPF operates, the more ash (burnt residue) is collected in the filter. Too much ash build-up adversely affects the DPF performance.
When the DPF cleaning time draws near, the message "DPF cleaning soon" appears on the display. When this message appears, clean the DPF.
Contact your local Kubota dealer to clean the DPF.

IMPORTANT :

- **To clean up the DPF, a specific machine is required.**
  Do not attempt to clean it in any other way, such as disassembling, shaking and heating as toxic chemicals may be present inside of the DPF.

4. Cleaning the plastic parts and synthetic leather

- Use a soft cloth when wiping plastic parts or synthetic leather.
- If the plastic or synthetic leather is very dirty, use a soft cloth dipped in a mild detergent that has been diluted with water.
- Wipe off any remaining moisture or detergent with a soft cloth that has been moistened with water and then thoroughly wrung out.
- Cleaning the plastic parts with alkaline, acidic, or organic solvents such as alcohol or benzene can damage them.

OTHER ADJUSTMENTS AND REPLACEMENTS

PURGING THE FUEL SYSTEM

1. Fill up the fuel tank with fuel.
2. Turn the starter switch to the **[RUN]** position.
3. The air in the fuel system will automatically be purged within 1 minute.

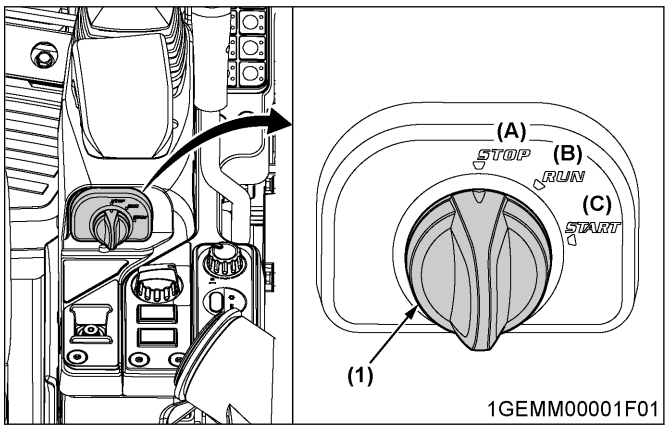

(1) Starter switch
(A) STOP
(B) RUN
(C) START

IMPORTANT :
- **If the purging was insufficient, the engine stops right after starting. In this case, repeat steps 2 to 3.**

ADJUSTING THE TRACKS

⚠ WARNING
To avoid personal injury or death:
- **Make sure that no obstacles, such as stones are caught in the track. Remove such obstacles before adjusting the track tension.**
- **Do not crawl under the machine.**

IMPORTANT :
- **If the tracks are too tight, wear is increased.**
- **If the tracks are too loose, the track pads may collide with the sprocket, wear is increased. The track may dislocate or come off.**
- **Clean the track after every use.**

1. Adjusting steel tracks

IMPORTANT :
- **Should the track tension be high due to sticking mud, lift the track with the help of the boom, arm and bucket, idle the engine and remove mud from the track, especially from the openings of the link plate carefully.**

Tensioning
1. Loosen the bolt of the cover and remove the cover.
2. Apply grease to the grease fitting.

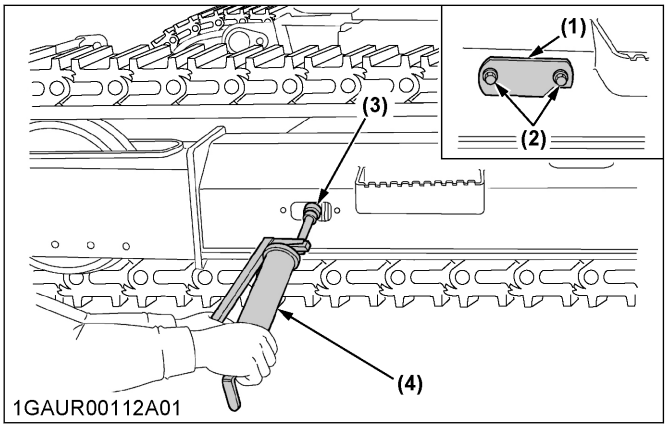

(1) Cover
(2) Bolt
(3) Grease fitting
(4) Grease gun

3. To check the track tension, lift the track from the ground as shown in the following illustration. The track tension is correct if the clearance between the outer end of the track roller and the track interior surface corresponds to the dimension specified in the following table.

Clearance	40 mm to 55 mm

⚠ DANGER
To avoid serious injury or death:
- **Do not work under the machine in this condition.**
- **For your safety, do not rely on hydraulically supported devices. They may leak down and suddenly drop or be accidentally lowered.**

⚠ WARNING
To avoid personal injury or death:
- **When lifting the machine itself with an attachment, place a safety block or safety post to prevent the machine from turning over. Keep the pilot control lock lever in the LOCK position.**

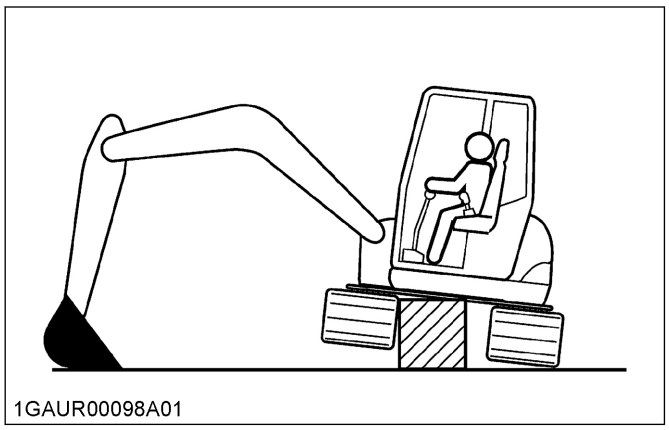
1GAUR00098A01

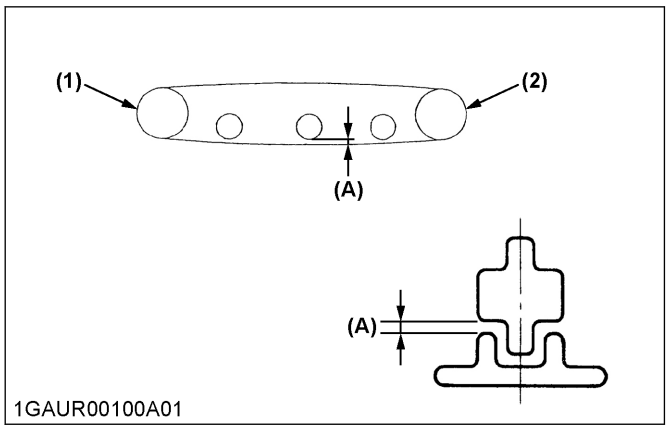

1GAUR00100A01

(1) Drive sprocket
(2) Idler
(A) 40 mm to 55 mm

Loosening

⚠ WARNING
To avoid personal injury:
- **Do not loosen the grease fitting completely or too quickly. Otherwise grease under high pressure in the tension cylinder could squirt out.**

1. Loosen the bolt of the cover and remove the cover.
2. Using a socket wrench, loosen the grease fitting a few turns.
3. When grease oozes out from the thread, rotate the track and loosen the track in the lifted position.
4. After adjustment is completed, tighten the grease fitting using a socket wrench. Tightening torque must be between 98 N·m to 108 N·m.

2. Adjusting rubber tracks

IMPORTANT :
- **Should the track tension be high due to sticking mud, lift the track with the help of the boom, arm and bucket, idle the engine and remove mud from the track by rotating it.**
- **Track seam.**
  The ends of the rubber track are joined with a seam. When adjusting the tracks, the seam must be positioned on the top center between the idler and the sprocket.
  If the seam is positioned incorrectly, the tracks will be tensioned to loosely, and a further readjustment will be necessary.
- **Rotate the track after adjustment one to two times to check the tension.**
- **Check track tension 50 hours after initial use and readjust if necessary. Check and adjust thereafter every 50 service hours.**

Tensioning
1. Loosen the bolt of the cover and remove the cover.
2. Apply grease to the grease fitting.

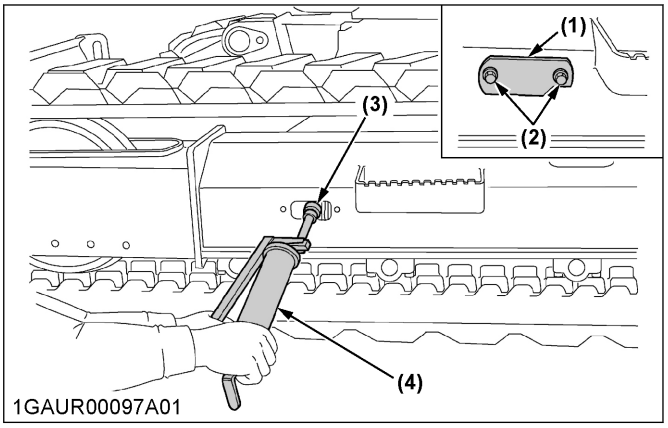

1GAUR00097A01

(1) Cover
(2) Bolt
(3) Grease fitting
(4) Grease gun

3. Tension the track in the lifted position, so that the distance *"A"* (clearance between the track roller and the inside surface of the track) corresponds to the dimension specified in the following table (see illustration).
   In this case, the track seam is positioned on the top center between the idler and the sprocket.

Clearance	25 mm to 40 mm

⚠ DANGER
To avoid serious injury or death:
- **Do not work under the machine in this condition.**
- **For your safety do not rely on hydraulically supported devices, they may leak down and suddenly drop or be accidentally lowered.**

⚠ WARNING
To avoid personal injury or death:
- **When lifting the machine itself with an attachment, place a safety block or safety post to prevent the machine from turning over. Keep the pilot control lock lever in the LOCK position.**

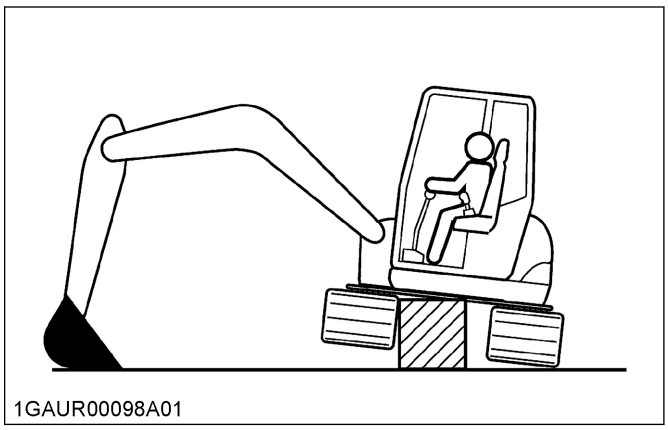
1GAUR00098A01

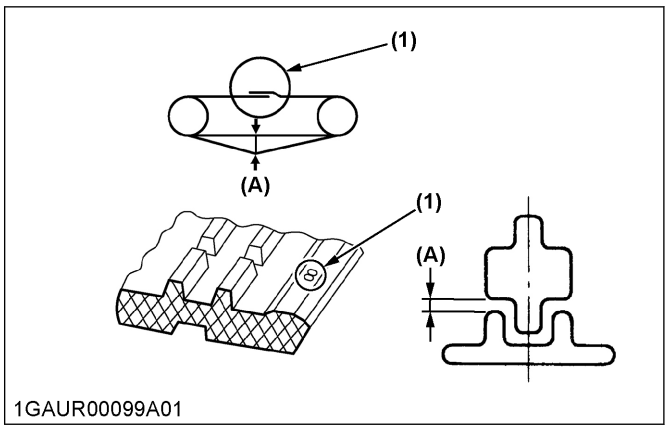

1GAUR00099A01

(1) Seam (Marked ∞) *(A) 25 mm to 40 mm*

Loosening

⚠ WARNING

To avoid personal injury:

- **Do not loosen the grease fitting completely or too quickly.**
  Otherwise grease under high pressure in the tension cylinder could squirt out.

1. Loosen the bolt of the cover and remove the cover.
2. Using a socket wrench, loosen the grease fitting a few turns.
3. When grease oozes out from the thread, rotate the track and loosen the track in the lifted position.
4. After adjustment is completed, tighten the grease fitting using a socket wrench.
   Tightening torque must be between 98 N·m to 108 N·m.

3. Special information regarding the use rubber tracks

- When turning, make a slow swivel turn.
  Avoid spin turns to lessen lug wear and entry of dirt.
- The relief valve may be activated if too much dirt and sand clog the tracks. In this case move the machine for a short distance straight backwards to let the earth and sand fall off, then a turn can be made.
- Avoid using rubber track on riverbeds, stony underground, ferro-concrete and on iron plates. The rubber can damage as well as increase wear on the tracks.

CHANGING THE BUCKET

⚠ WARNING

To avoid personal injury or death:

- **Two people are required to replace the bucket. One person operates the excavator, and the other one mounts the bucket.**
  The person who mounts the bucket must command and guide the movements of the front end attachments. The operator should move the front end attachments only according to the commands of the person who mounts the bucket. Continuous visibility between both persons is indispensable. If there is no visibility, stop working immediately.
- **When replacing the bucket, wear eye protection, a helmet, and protective gloves.**
- **During attaching and detaching, chippings and burns may occur at the bolts or bushings.**
  These may cause severe injuries.
- **Never use your fingers for the alignment of the components (linkage, bucket, and arm). The components may sever your fingers due to the uncontrolled movements.**
- **When other attachments are installed instead of a Kubota specified bucket, read the attachment manual to perform safe operation.**

IMPORTANT :

- **Be sure that the pulled-out pins are carefully kept free from sand and mud.**
- **The dust seals are attached at both ends of the bushing. When drawing out the pins, be careful not to damage these seals.**

To change the bucket, conduct the following procedure.

Detaching the bucket

1. Place the bucket on a flat, level spot.
2. Stop the engine and relieve the pressure out of the hydraulic system.
3. Remove the O-ring out of the groove, and draw the pins out of the holes A and B.

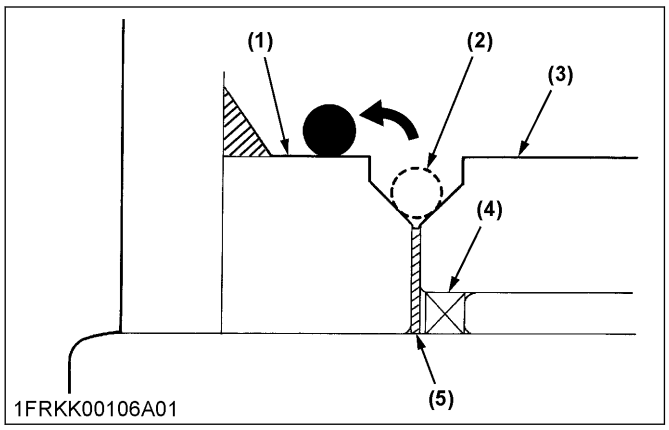

(1) Bucket
(2) O-ring
(3) Arm (or link)
(4) Dust seal
(5) Shim

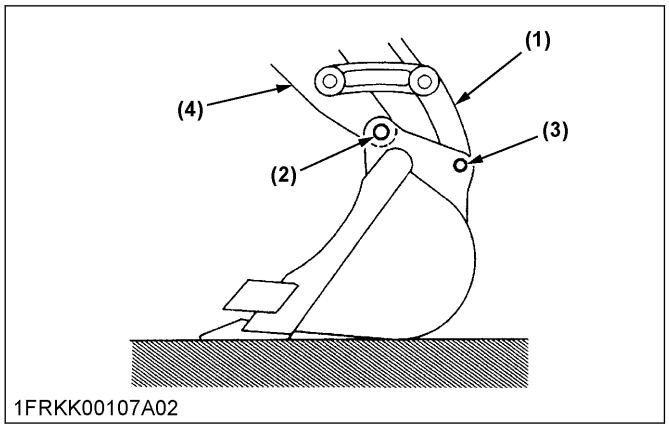

(1) Link
(2) Hole A
(3) Hole B
(4) Arm

Attaching the bucket

1. Install the O-ring on the bucket boss.
2. Fit the arm into hole A, insert the shims into both ends of the arm, and couple them with the pins.
3. Fit the link into hole B, insert the shims into both ends of the link, and couple them with the pins.
4. Install and tighten up the lock bolts to secure the pins in position.
5. Install the O-ring into the groove.

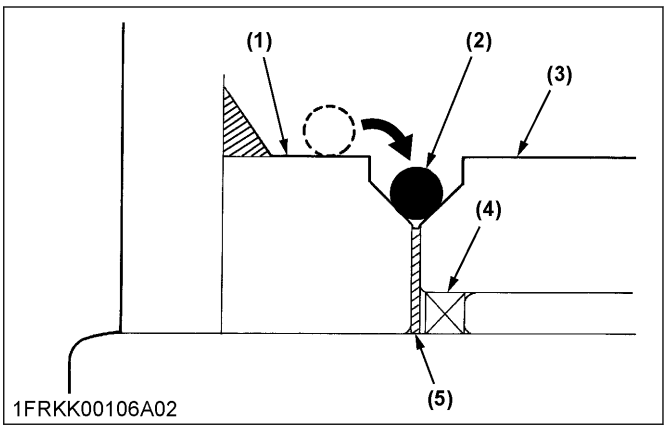

(1) Bucket
(2) O-ring
(3) Arm (or link)
(4) Dust seal
(5) Shim

6. Apply grease to the pins.

FUSES

⚠ WARNING

To avoid personal injury or death:

- **When changing the fuse, stop the engine and turn the starter switch to the [STOP] position. Keep the pilot control lock lever in the LOCK position.**

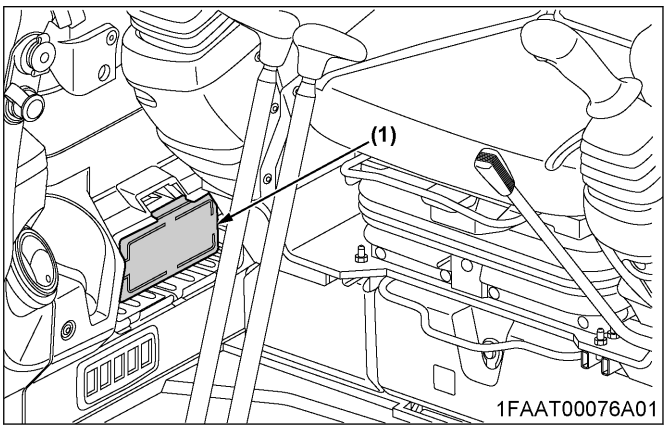

(1) Fuse box

1. Replacing fuses

1. Remove the cover of the fuse box.
2. Replace the burnt out fuse with a fuse which has the same capacity.

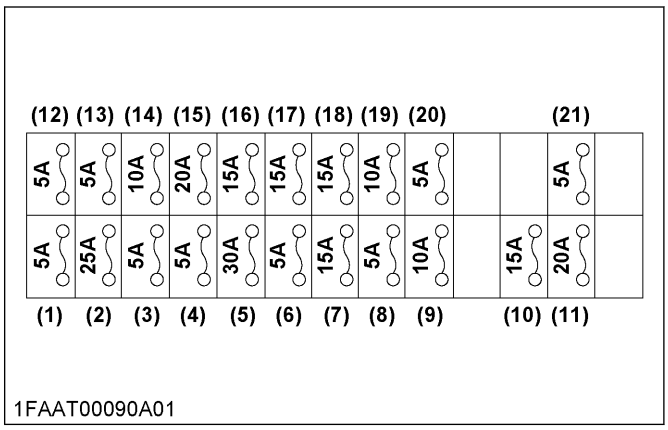

(1)	Room light	(12)	ECU main (AC)
(2)	Blower motor	(13)	Control lever lock
(3)	A/C Controller	(14)	Alternator
(4)	ECU LCD (+B)	(15)	Seat
(5)	ECU main (power)	(16)	12 V electrical outlet
(6)	Horn switch	(17)	Wiper/Washer system
(7)	Beacon	(18)	Radio (AC)
(8)	K-OBD	(19)	Compressor
(9)	Horn	(20)	Fuel pump
(10)	Front work light	(21)	Starter
(11)	Cab work light		

2. Replacing slow-blow fuses

A slow-blow fuse is provided to protect the electrical circuits. If a slow-blow fuse is blown, check the electrical circuits for trouble and then replace with a new compatible slow-blow fuse.

⚠ WARNING

To avoid personal injury or death:

- **When changing fuses, stop the engine and turn the starter switch to [STOP] position. Keep the pilot control lock lever in the LOCK position.**

IMPORTANT :

- **The main fuse protects the entire electrical system. If the main fuse or another fuse has blown, determine why it blew and make any necessary repairs.**
  Never bridge fuses, always replace them with a new fuse of the same rating.

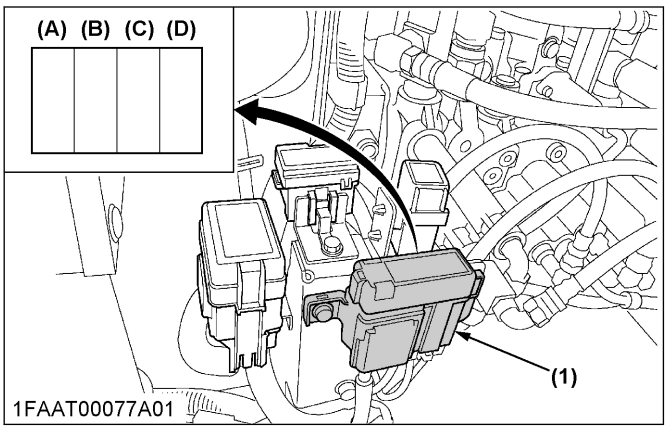

(1) Slow blow fuse

(A)	100 A Alternator
(B)	30 A Engine ECU
(C)	60 A Main Power
(D)	50 A Engine Power

1. Disconnect the negative cord of the battery.
2. Remove the slow-blow fuse case.
3. Open the slow-blow fuse case cap and covers, then remove the bolts and draw out the slow-blow fuse (A) and fuse (B).

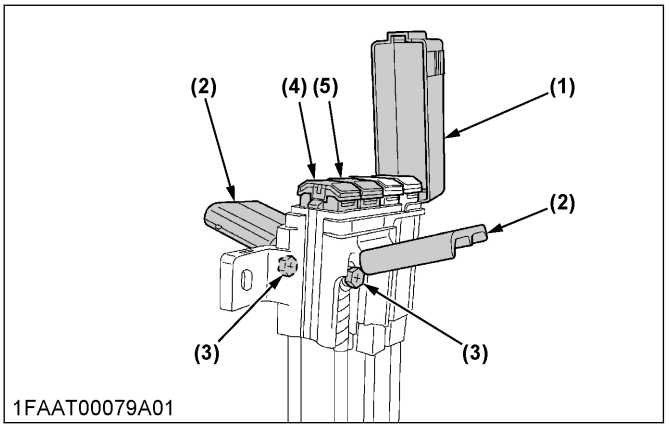

(1) Slow blow fuse case cap
(2) Cover
(3) Bolt
(4) Slow blow fuse (A)
(5) Slow blow fuse (B)

3. Electric fuse

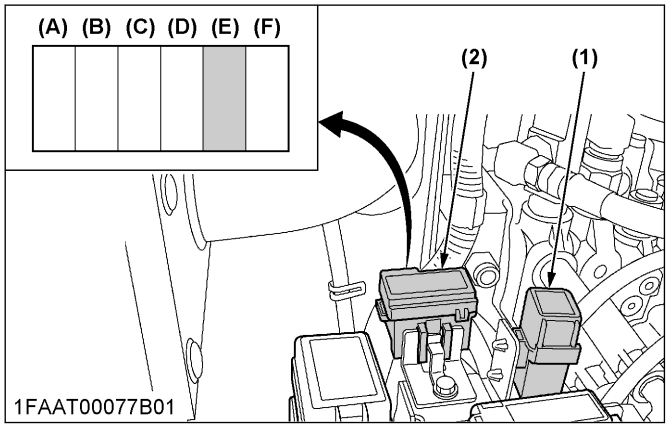

(1) Electric fan fuse (20 A slow blow fuse)
(2) Air flow sensor (5 A slow blow fuse) (E)

TROUBLESHOOTING

TROUBLESHOOTING OF THE ENGINE AND OTHER SYSTEMS

If the machine does not perform as desired, or when trouble arises, refer to the following table and carry out the appropriate measures.

Trouble		Cause	Countermeasure
Engine	Starting difficulties	Pilot control lock lever is in the UNLOCK position.	• Bring pilot control lock lever into the LOCK position.
		Fuel is too viscous or dirty.	• Check the fuel tank and filter. • Remove impurities and water. • If necessary, replace the filter.
		Air or water is in the fuel system.	• Remove water from the fuel tank. • Check the fuel pipe joint bolts and nuts for looseness. • Purge of the fuel system. Details regarding the purging operation for fuel filter and injection pump can be found in a different section. (See PURGING THE FUEL SYSTEM on page 123)
		Oil viscosity is too high and the engine runs sluggishly in the winter.	• Pour hot water over the radiator.
		Battery is almost dead. Insufficient compression	• Recharge the battery.
	Insufficient engine power	Low fuel level	• Check the fuel level and add fuel if necessary.
		Clogged air cleaner	• Clean the air filter element.
	Engine suddenly stops.	Low fuel level	• Check the fuel level and add fuel if necessary. • Purge the fuel system.
		Clogged fuel filter	• If necessary, replace the fuel filter.
	Abnormal exhaust gas color	Poor quality fuel	• Use high quality fuel.
		Too much engine oil	• Drain the engine oil to the prescribed oil level.
	Water temperature in red zone (overheating)	Defective seal of the water pump	• Replace
		Worn or torn V-belt	• Adjust or replace
		Thermostat is defective.	• Replace
		Coolant level is too low.	• Fill to the prescribed level.
		Radiator grill or fins are clogged.	• Clean
		Coolant is contaminated with rust from the cylinder head or crank case.	• Replace the coolant fluid and add anti-rust.
		Defective radiator cap (evaporation)	• Replace
		Corroded coolant pipes	• Clean
		Continuous operation under full load	• Reduce load
		Cylinder head gasket is damaged (coolant loss).	• Replace
		Engine oil level is too low.	• Fill to the prescribed level.
		Maladjustment of fuel injection	• Readjust the ignition timing.

(Continued)

Trouble		Cause	Countermeasure
Engine	Water temperature in red zone (over-heating)	Use of poor fuel	• Use the prescribed fuel.
Hydraulic system	Boom, arm, bucket, drive, swivel and dozer power is too low.	Hydraulic oil level is too low.	• Add oil.
		Leakage of hoses and/or joints	• Replace the hose or joint.
	Swivel motor and front attachment does not work.	Pilot control lock lever is in the LOCK position	• Bring the pilot control lock lever into the UNLOCK position.
Drive sys-tem	Deviation of drive direction	Blocked with stones	• Remove
		Track is too loose or too tight.	• Adjust accordingly.
DPF		See AUTOMATIC DIESEL PARTICULATE FILTER (DPF) REGENERATION on page 148 and LOCKING AND RELEASING THE DIESEL PARTICULATE FILTER (DPF) REGENERATION on page 150.	

OPERATION IN COLD WEATHER

PREPARATION FOR WORK IN COLD WEATHER

- Replace engine oil and hydraulic oil with those of viscosities suitable for cold weather.
- In cold weather, battery power drops, and the battery fluid may freeze if the battery is not sufficiently charged. To prevent the battery fluid from freezing, be sure to keep the battery charged at least 75% or more of its capacity after operation. So that the machine starts easily next time, it is recommended to keep the battery stored in closed or heated rooms. If the battery fluid level is too low, do not add after operation, but add with the engine running before the next operation.
- Add antifreeze to coolant in the radiator and recovery tank, if the ambient temperature is expected to drop below 0 ℃. Mixing ratio of water and antifreeze depends on the expected ambient temperature.

Mixing ratio between water and antifreeze

Ambient temperature	**℃**	**-5**	**-10**	**-15**	**-20**	**-25**	**-30**	**-35**
Antifreeze	%	30	30	30	35	40	45	50
Water	%	70	70	70	65	60	55	50

IMPORTANT :

- **Use permanent antifreeze or long-life coolant.**
- **Drain the coolant completely and clean the inside of the radiator, then fill with the water and antifreeze mixture.**
- **The antifreeze acts as an anti-corrosive, it is not necessary to add an additive to the water and antifreeze mixture.**
- **Details regarding the radiator fill volumes can be found in a different section.**
  (See Checking the coolant level on page 97.)

AFTER WORKING IN COLD WEATHER

- Clean the machine thoroughly after work and wipe dry. Otherwise mud and earth on the tracks could freeze if the temperature drops below the 0℃ mark. Operation of the machine is then not possible.
- Store the machine in a dry place. If not possible, store on wooden planks or on mats. If the machine is kept on damp or muddy ground, the tracks could freeze overnight. Operation of the machine is then not possible. Furthermore the travel motor may be damaged.
- The piston rods of the hydraulic cylinders must be rubbed dry. Otherwise severe damage could occur if dirty water seeps through the seals.

LONG-TERM STORAGE

⚠ WARNING

To avoid personal injury or death:

- **Do not clean the machine while the engine is running.**
- **To avoid the danger of exhaust fume poisoning, do not operate the engine indoors without proper ventilation.**
- **Park the machine on a firm, flat, and level surface. Lower the attachments and dozer blade to the ground.**

NOTE :

- **If the excavator is taken out of service for 1 month or more, the measures described in the following section must be carried out before, during, and after taking it out of service. If these measures have not been carried out, consult your Kubota dealer before operating the machine.**

PREPARATIONS BEFORE LONG-TERM STORAGE

If the machine is to be stored for an extended period of time, perform the following procedures:

- Wash and clean the machine thoroughly, and touch up the paint finish to avoid rusting.
- Treat exposed parts with an anti-rust agent, lubricate the machine thoroughly and apply plenty of grease to unpainted surfaces such as lifting and tilting cylinders. Pull the pistons in the hydraulic cylinders in as far as possible (if appropriate).
- Do an oil change and fill the hydraulic oil tank and fuel tank to the maximum marks.
- Check the antifreeze properties and drain fluids as appropriate. If it is expected that the temperature will drop below 0 ℃, add antifreeze or drain the coolant completely.
- Preferably, store the excavator indoors. If the excavator cannot be stored indoors and must be stored outdoors, arrange wooden planks on even ground, place the excavator on the planks and cover the excavator completely (especially the exhaust pipe).
- Prior to putting into long-term storage, the machine shall be inspected and the condition of preservation treatment, seals, and components shall be checked.
- Remove the battery and store indoors.

IMPORTANT :

- **Wash the excavator after stopping the engine.**
  If you wash the excavator while the engine is running, water can splash and get into the air cleaner through its intake and cause engine damage.

OPERATING THE MACHINE PERIODICALLY DURING LONG-TERM STORAGE

If the machine is stored for longer than 1 month, perform the following procedure every 1 month:

1. Turn on the engine.
2. Operate the front attachments and the travel system with no load to circulate the hydraulic oil and charge the battery at the same time.

OPERATING THE MACHINE AFTER LONG-TERM STORAGE

1. Wipe off the grease from the hydraulic cylinder rods. When removing the rust inhibitor, follow the manufacturer's instructions.
2. Thoroughly inspect the machine and clean off any debris.
3. Inspect the seals to make sure that there are no oil or water leaks.
4. Turn on the engine.
5. Run the machine at idle and check all functions.

IMPORTANT :

- **If the auxiliary port has not been used for a long period of time, dirt particles could have accumulated on the connectors of the conduits. Before installing an attachment, drain approximately 0.1 liter of hydraulic oil at each port.**

PERIODIC REPLACEMENT OF PARTS

To ensure safe operation, inspect and service the machine at regular intervals. For added safety, ask your Kubota dealer to replace the following important parts.
These parts are prone to material degradation or subject to wear and tear with time. It is difficult to judge how much they have been affected at a regular inspection. Therefore, it is necessary to replace them with new ones, regardless of whether wear is visible or not after a specified time of use.
If any of them are found worn even before the specified time of use, they must be repaired or replaced the same way as other parts.
If any of the hose clamps are found deformed or cracked, they must also be replaced.
For the hydraulic hoses other than the ones to be replaced periodically, inspect them for the following points. If found in an unusual condition, tighten them up or replace them.
When replacing the hydraulic hoses, change their O-rings and sealings with new ones.
For replacement of the important parts, contact your local Kubota dealer.

While performing the following periodic inspections, check the fuel hoses and hydraulic hoses also.

Inspection interval	Check points
Daily checks	Oil leak at fuel and hydraulic hose connections and points
Every month	Oil leak at fuel and hydraulic hose connections and points Damage at fuel and hydraulic hose (cracks, chafing)
Every year	Oil leak at fuel and hydraulic hose connections and points Interference, deformation, degradation, twist and other damage (cracks, chafing) of fuel and hydraulic hoses

List of important component parts

No.	Component parts	Period
1	Fuel hose	Every 2 years or 4000 hours
2	Hydraulic hose (suction)	
3	Hydraulic hose (delivery)	
4	Hydraulic hose (Boom cylinder)	
5	Hydraulic hose (Arm cylinder)	
6	Hydraulic hose (Bucket cylinder)	
7	Hydraulic hose (Swing cylinder)	
8	Hydraulic hose (Dozer cylinder)	
9	Hydraulic hose (Service port)	
10	Hydraulic hose (Swivel motor)	
11	Hydraulic hose (Travel motor)	
12	DPF differential pressure sensor rubber piping (Front and Back)	
13	Suction pipe downstream the AFS (Air Flow Sensor)	
14	Boost sensor pressure rubber piping	

To prevent serious damage to the hydraulic system, use only a Kubota genuine hydraulic hose.

RECOMMENDED OILS

		Recommendation			Filled at the factory		Notes
		Ambient temperature conditions	Viscosity	Quality standard	Brand	Type	
Engine oil	Engine	In summer and/or in high ambient temperatures (above 25°C)	SAE 30 SAE 10W-30 SAE 15W-40	API CJ-4 API CK-4	JXTG	JASO DH2 SAE 10W-30	Do not mix with other oils.
		All-weather (0°C to 25°C)	SAE 20 SAE 10W-30 SAE 15W-40				
		In winter and/or in low ambient temperatures (below 0°C)	SAE 10W SAE 10W-30 SAE 15W-40				
	Front idler	—	SAE 30	API CD	—	API CD SAE 30	
Coolant		—	—	—	KUBOTA	LLC-N-50F Mixing ratio 50 %	Always use distilled water as the admixture for antifreeze. Refer to the respective coolant manufacturer's recommendations for the correct mixing ratio. Do not mix with other coolants.
Grease	Pin, Bushing, Bearing, Gear	—	NLGI-2	—	COSMO	NEW Dynamax EP2	JCMAS GK verified NLGI-2 grease can also be used.*1
					IDEMITSU	Daphne Grease MP No. 2	
Hydraulic oil		In winter and/or in low ambient temperatures	ISO VG 32 ISO VG 46	—	SHELL	Tellus S2M46 ISO VG 46	JCMAS HK verified oil can also be used.*1 Do not mix with other oils.
		In summer and/or in high ambient temperatures	ISO VG 46 ISO VG 68	—			
Gear oil	Travel motor	—	SAE 90	API GL-4 API GL-5	—	API GL-4 SAE 90	Do not mix with other oils.
	Track roller	—	ISO VG 220	—	—	ISO VG 220	

(Continued)

	Recommendation			Filled at the factory		Notes
	Ambient temperature conditions	Viscosity	Quality standard	Brand	Type	
Diesel fuel*2	—	—	No.2-D (ASTM D975)	—	—	The fuel filled at the factory is not winter diesel. When preparing the machine for the winter, fill the fuel tank with winter diesel and let the engine run for a few minutes.
	In winter and/or in low ambient temperatures (below 5°C)	—	No.1-D (ASTM D975)	—	—	
Refrigerant	—	—	HFC134a (R134a)	—	HFC134a (R134a)	—

*1 Other than the oil mentioned below, JCMAS HK certified oil and GK certified grease can also be used.
Check the Japan Lubricating Oil Society (JALOS) website for more details.

*2
- Use ultra low sulfur diesel fuel only [below 0.0015 % (15 ppm)].
- Cetane number of 45 is minimum. Cetane number greater than 50 is preferred, especially for temperatures below -20℃ or elevations above 1500 m.
- Diesel fuels specified to EN 590 or ASTM D975 are recommended.
- No.2-D is a distillate fuel of lower volatility for engines in industrial and heavy mobile service. (SAE J313 JUN87)

IMPORTANT :
- **If you use different fuel or engine oil, the cleaning efficiency of the DPF will be reduced and the DPF longevity will be shorter than expected.**
- **Filters must trap fuel and lubricant sulfate additives (Zn, Pb, Na, K, Ca, Mg, Cu, Ba, P, and so on.) as ash during combustion. Fuel must be controlled carefully to prevent the additives being mixed into fuel such as fuel tank anti-oxidants, water remover, antifreeze and so on.**

BIODIESEL FUEL (BDF)

B0-B5 Biodiesel fuels (BDF): mixed diesel fuels containing 5 % or less biodiesel can be utilized under the following conditions.

IMPORTANT :

- **Refueling and handling fuel should be done with caution in order to avoid contact with the fuel and spillage that could create a potential environmental or fire hazard. Wear appropriate protective equipment when refueling.**

Applicable BDF:

- BDF concentration must not exceed 5 % by volume (B5 blend). Greater concentrations increase the likelihood of corrosion and failure of the aluminum, zinc, rubber, and plastic parts of the fuel system.
- Any mineral oil diesel fuel, if used, must conform to ASTM D975 (or the European EN590) Standard, as revised.
  B100 fuel used to make biodiesel blended fuels must meet ASTM D6751 (or EN14214) Standard, as revised.
  Straight vegetable oil is not allowed in any blended fuel.
- Kubota strongly recommends that B5 blend be purchased from a BQ-9000 accredited producer or certified marketer.
  Kubota discourages local blending of BDF, because it is difficult to meet the quality requirements explained above.

Product warranty, emission and other precautions:

- The engine emission control system was certified according to current regulations based on the use of non-BDF. When using BDF, the owner is advised to check applicable local and federal emission regulations and comply with all of them.
- BDF may cause restricted or clogged fuel filters during cold weather conditions, resulting in the engine not operating properly.
- BDF encourages the growth of microorganisms which may cause degradation of the fuel.
  This in turn may cause fuel line corrosion or reduce fuel filter flow earlier than expected.
- BDF inherently absorbs moisture which may cause degradation of the fuel earlier than expected.
  To avoid this, drain the water separator and fuel filter port often.
- Do not use biodiesel concentrations higher than 5 % (namely, greater than B5).
  Engine performance and fuel consumption will be affected, and degradation of the fuel system components may occur.
- Do not readjust the engine fuel control system as this will violate emission control levels for which the equipment was approved.
- Compared with soybean-based and rapeseed-based feedstock, palm oil-based feedstock has a thicker consistency (meaning. higher viscosity) at lower temperatures.
  Consequently, fuel filter performance may be reduced, particularly during cold weather conditions.
- The Kubota warranty, as specified in the owner's warranty information guide, only covers defects in product materials and workmanship. Accordingly, any problems that may arise due to the use of poor quality fuels that fail to meet the above requirements, whether biodiesel or mineral oil based, are not covered by the Kubota warranty.

Routine handling:

- Avoid spilling BDF onto painted surfaces as this may damage the finish.
  If fuel is spilled immediately wipe clean and flush with soapy water to avoid permanent damage.
- When using BDF, you are advised to maintain a full tank of fuel, especially overnight and during short term storage, to reduce condensation within the tank. Be sure to tighten the fuel cap after refueling to prevent moisture build up within the tank. Water in the biodiesel mixture will damage fuel filters and may damage engine components.
- Follow the oil change intervals recommended by referring to the MAINTENANCE INTERVALS on page 91 section.
  Extended oil change intervals may result in premature wear or engine damage.

Long term storage:

- BDF easily deteriorates due to oxygen, water, heat and foreign substances. Do not store longer than 3 months.
- When using B5 fuel and storing machine longer than 3 months, drain the fuel from the tanks and replace with light mineral oil diesel fuel. Subsequently, run the engine at least 30 minutes to remove all of the biodiesel from the fuel lines.

REQUEST REGARDING FUEL USE AND MAINTENANCE OF CRS DIESEL ENGINES

Please use fuel and perform maintenance as directed in this operator's manual.

Use quality fuel (diesel) that meets the exhaust gas regulations for the region where the engine is used. Particular attention should be given to contamination and sulfur content in the fuel.

- Kubota CRS diesel engines are equipped with an electronically controlled high-pressure fuel injection system (CRS: Common Rail System) and an exhaust emission control system (DPF: Diesel Particulate Filter) in order for the engines to perform satisfactorily and to meet required emission characteristics.
- The electronically controlled high-pressure fuel injection system is made up of high precision components. If the fuel gets contaminated with foreign matters, the system may malfunction or very adversely affected for its service life. If the sulfur content is higher than approved, the product service life may be reduced. It includes the early deterioration of engine oil, the wear of engine components and the catalyst degradation of the exhaust emission control system.

Country	Standard name	Sulfur content reference value	Remarks
Europe	EN590	0.0010 % (10 ppm) or less	—
North America	ASTM D975	0.0015 % (15 ppm) or less	—
Japan	JIS K2204	0.0010 % (10 ppm) or less	—
Australia	Australian Standard	0.0010 % (10 ppm) or less	—
Republic of Korea	Korean Standard	0.0010 % (10 ppm) or less	—
China	GB 252	0.0050 % (50 ppm) or less	From July 1, 2017
		0.0010 % (10 ppm) or less	From January 1, 2018

Handle fuel, fuel tank and fuel filter with enough care to keep them free of foreign matters.

- Do not use any fuel that is contaminated with dust and the like.
- Do not refuel the machine nor replace the filter in any dusty environments.
- During refueling, be careful to prevent foreign matters from coming into the fuel tank.
- Before replacing the filter, clean up its periphery.
- Do not interrupt the replacement job. This is to keep the filter and its periphery free of foreign matters.
- For the job, wear clean vinyl or similar gloves. Cotton work gloves and other fiber gloves may cause contamination.

Use only Kubota brand parts. Perform maintenance in accordance with instructions from Kubota.

- Inspect and replace the water separator and fuel filter at regular intervals in accordance with the instructions provided by Kubota.
- If any other water separators and fuel filters than Kubota brands are used and if the specified servicing instructions are neglected, malfunctions similar to those caused by the use of non-specified fuel may occur, leading to engine breakdown.

The following cases are not covered by the warranty. Kubota will not be responsible for any burden of expenses.

- If the engine fails because of the use of any fuel and/or fuel filter not recommended by Kubota or because of the negligence of specified servicing instructions, the end user will be responsible for all costs.

APPENDICES

MAIN DIMENSIONS

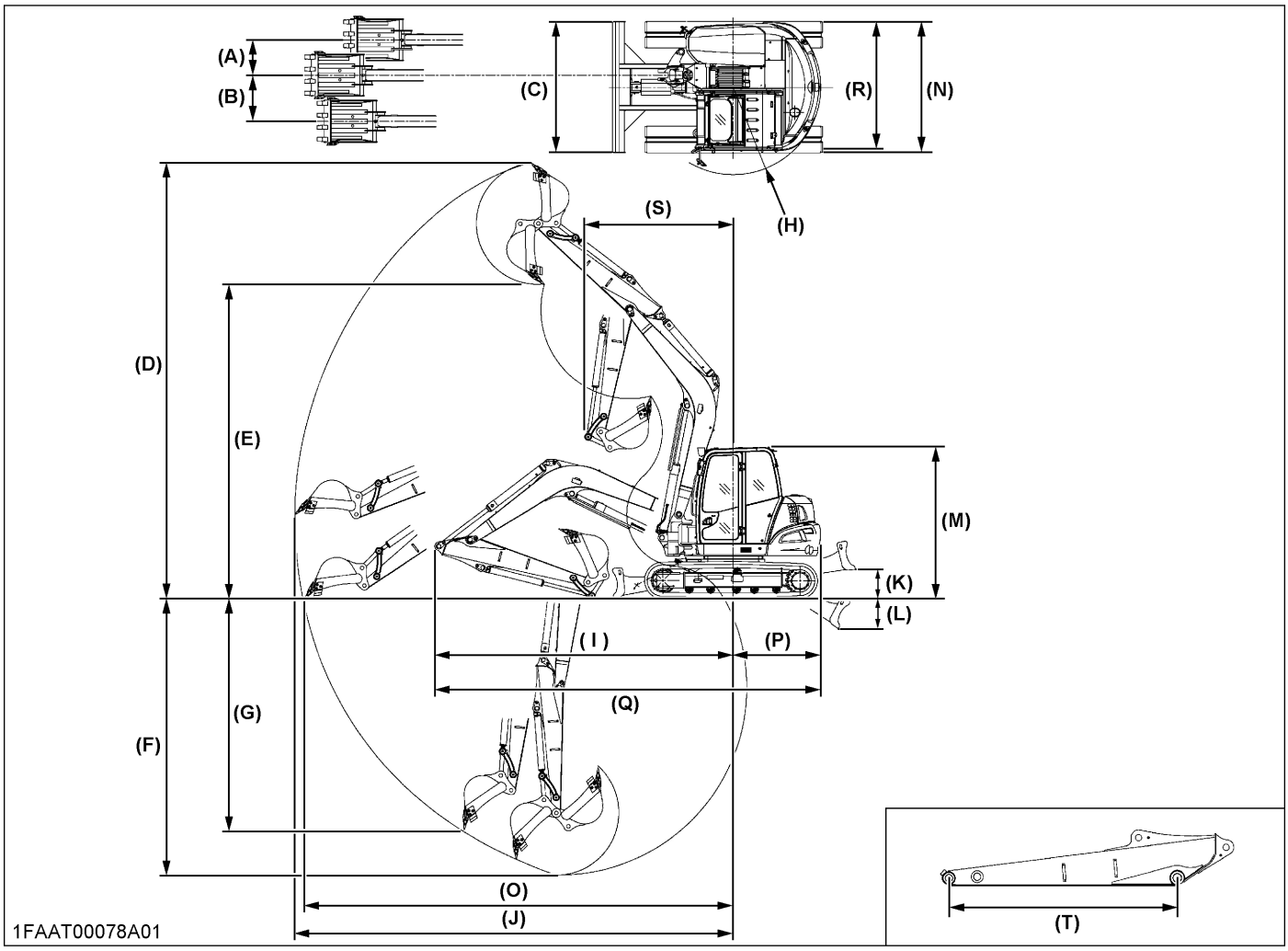

(A)	(B)	(C)	(D)	(E)	(F)	(G)	(H)	(I)	(J)
590	770	2200	7300	5250	4600	3850	1460	4990	7330

(K)	(L)	(M)	(N)	(O)	(P)	(Q)	(R)	(S)	(T)
500	500	2540	2200	7170	1460	6450	2150	2490	2100

mm

NOTE :

- **Above dimensions are based on a machine with Kubota original bucket.**
- **Above dimensions are based on a machine with rubber tracks.**
- **Specifications are subject to change without notice.**

LIFTING CAPACITY

IMPORTANT INFORMATION

⚠ WARNING

To avoid personal injury or death:

- **Do not lift loads greater than those values mentioned in the lifting capacity tables.**
- **The values mentioned in the table are valid only on even, hard ground. When lifting on soft ground, the machine can roll over due to the load being concentrated only on one side of the machine.**
- **The table values are calculated at the end of the arm without the bucket. In order to find the allowable loads for machines with a bucket, subtract the bucket weight from the values in the table.**

1. The lifting capacities are based on **ISO 10567** and do not exceed 75 % of the static tilt load of the machine or 87 % of the hydraulic lifting capacity of the machine.
2. The strokes are as follows:
   a. The load point corresponds to the front bolt part of the arm.
   b. The machine positions are
      i. over - front (dozer blade down)
      ii. over - front (dozer blade up)
      iii. over - side
   c. The operating cylinder is the boom cylinder.
3. The bucket of the machine, the hook, the sling, and other lifting accessories are taken into consideration for the loads.
   The following illustration shows machine condition without the bucket and all the other conditions are according to standard regulations.

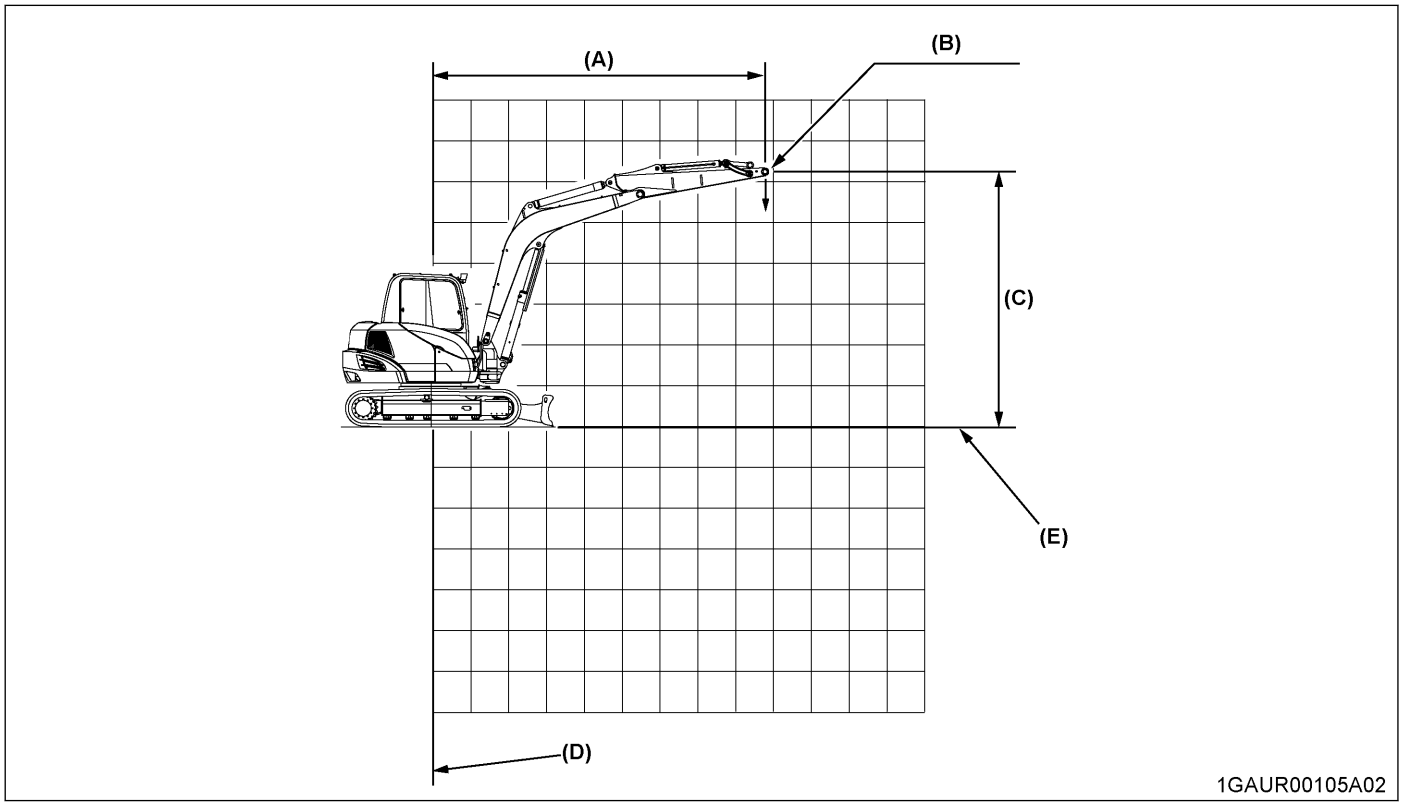

(A) Lift radius (B) Lift point (C) Lift point height (D) Axis of rotation (E) Ground level

LIFTING CAPACITY WITH RUBBER TRACKS

Lifting capacity over-end dozer blade down

Lift point height (m)		Load radius (m)							
		Min	1	2	3	4	5	6	Max
	5					1.45			
	4					1.55	1.50		
	3				2.20	1.85	1.65	1.55	
	2				3.30	2.30	1.85	1.60	
	1				4.15	2.65	2.05	1.70	1.60
GL*1	0				4.30	2.85	2.15	1.70	
	-1	1.90	2.90	3.40	4.05	2.80	2.10		
	-2		4.30	5.40	3.50	2.50	1.75		
	-3			3.60	2.45	1.60			

Unit=ton

Lifting capacity over-end dozer blade up

Lift point height (m)		Load radius (m)							
		Min	1	2	3	4	5	6	Max
	5					1.45			
	4					1.55	1.50		
	3				2.20	1.85	1.45	1.05	
	2				3.15	1.95	1.40	1.05	
	1				2.90	1.85	1.35	1.00	0.95
GL*1	0				2.80	1.80	1.30	1.00	
	-1	1.90	2.90	3.40	2.80	1.75	1.25		
	-2		4.30	5.40	2.80	1.75	1.30		
	-3			3.60	2.45	1.60			

Unit=ton

Lifting capacity over-side

Lift point height (m)		Load radius (m)							
		Min	1	2	3	4	5	6	Max
	5					1.45			
	4					1.55	1.15		
	3				2.20	1.60	1.10	0.80	
	2				2.30	1.50	1.05	0.80	
	1				2.10	1.40	1.00	0.75	0.70
GL*1	0				2.00	1.35	0.95	0.75	
	-1	1.90	2.90	3.40	2.00	1.30	0.95		
	-2		4.30	4.05	2.00	1.30	0.95		
	-3			3.60	2.05	1.35			

Unit=ton

*1 Ground level

LIFTING CAPACITY WITH STEEL TRACKS

Lifting capacity over-end dozer blade down

Lift point height (m)		Load radius (m)							
		Min	1	2	3	4	5	6	Max
	5					1.45			
	4					1.55	1.50		
	3				2.20	1.85	1.65	1.55	
	2				3.30	2.30	1.85	1.60	
	1				4.15	2.65	2.05	1.70	1.60
GL*1	0				4.30	2.85	2.15	1.70	
	-1	1.90	2.90	3.40	4.05	2.80	2.10		
	-2		4.30	5.40	3.50	2.50	1.75		
	-3			3.60	2.45	1.60			

Unit=ton

Lifting capacity over-end dozer blade up

Lift point height (m)		Load radius (m)							
		Min	1	2	3	4	5	6	Max
	5					1.45			
	4					1.55	1.50		
	3				2.20	1.85	1.45	1.05	
	2				3.15	2.00	1.40	1.05	
	1				2.95	1.90	1.35	1.13	0.95
GL*1	0				2.85	1.80	1.30	1.00	
	-1	1.90	2.90	3.40	2.80	1.75	1.30		
	-2		4.30	5.40	2.85	1.80	1.30		
	-3			3.60	2.45	1.60			

Unit=ton

Lifting capacity over-side

Lift point height (m)		Load radius (m)							
		Min	1	2	3	4	5	6	Max
	5					1.45			
	4					1.55	1.15		
	3				2.20	1.60	1.10	0.80	
	2				2.30	1.50	1.10	0.80	
	1				2.10	1.40	1.00	0.80	0.70
GL*1	0				2.00	1.35	1.00	0.75	
	-1	1.90	2.90	3.40	2.00	1.30	0.95		
	-2		4.30	4.10	2.00	1.30	0.95		
	-3			3.60	2.05	1.35			

Unit=ton

*1 Ground level

LIST OF SCREENS

NAVIGATION SCREENS

If an error occurs in the machine, one of the following messages appears on the display.
In case of trouble, immediately contact your local Kubota dealer for inspection and repair.
To view detailed information, press the jog dial (does not apply to numbers 1 through 3).
Notify your local Kubota dealer of this information.

No.	Message	Problem or failure (details)	Machine behavior (provisional measure)	Correction
1	Clock setting request 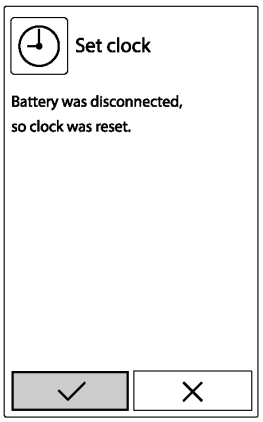 1SRUU00036B01enUS	The battery is disconnected, thereby requiring to set the clock.	Select “✔” to set the clock.	–
2	Tilt up the lock lever 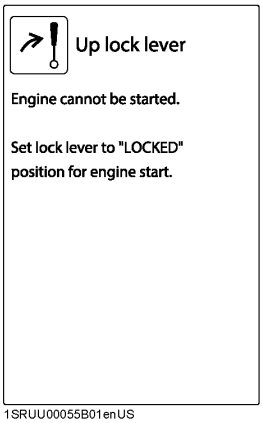 1SRUU00055B01enUS	This message indicates a procedural step.	Tilt up the pilot control lock lever. This message disappears by tilting up the pilot control lock lever.	–

(Continued)

No.	Message	Problem or failure (details)	Machine behavior (provisional measure)	Correction
3	Tilt down the lock lever 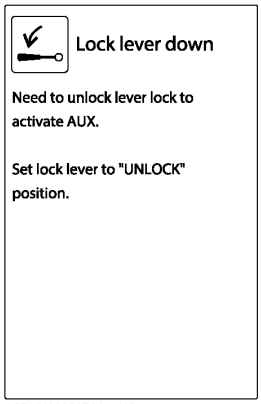 1SRUU00059B01enUS	This message indicates a procedural step.	Tilt down the pilot control lock lever. This message disappears by tilting down the pilot control lock lever.	–
4	Out of fuel 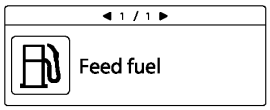 1SRUU00027B01enUS	Fuel is running out.	–	Add fuel.
5	Fuel sensor error 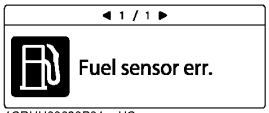 1SRUU00030B01enUS	The fuel sensor system is experiencing trouble.	The fuel level indicator does not appear on the meter. The machine's other functions are still operative.	Immediately contact your local Kubota dealer.
6	Charging system error 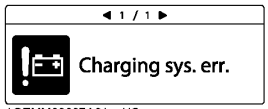 1GEMM00007A01enUS	Charging system is experiencing trouble. The battery is not charging.	The machine works until the battery goes dead.	Immediately contact your local Kubota dealer.
7	Engine oil pressure error 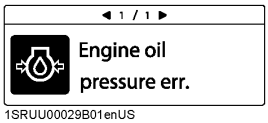 1SRUU00029B01enUS	The engine lubricating system oil pressure is too low. Stop the engine.	The engine may get burnt out. Immediately stop the engine.	Immediately contact your local Kubota dealer.
8	Overvoltage 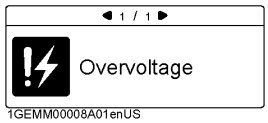 1GEMM00008A01enUS	This message appears if a jumper cable is connected to a 24 V battery or improper device to start the engine or if the alternator is experiencing trouble.	Immediately interrupt the engine if with a 24 V battery. When the engine gets restarted and is running with no message appearing, it means there is no problem.	If this message still appears, immediately ask for repairs.
9	Overheat advance warning Water temperature rising 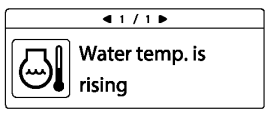 1SRUU00040B01enUS	Water temperature is rising somewhat higher than specified.	Operate with less load. Check the radiator and other components for clog. Immediately clean them up.	–

(Continued)

No.	Message	Problem or failure (details)	Machine behavior (provisional measure)	Correction
10	Cool-down during overheat idling  1SRUU00021B01enUS	The engine automatically reduces rpm to avoid an overheat.	Leave the engine idling until this warning disappears. Do not stop the engine because the coolant temperature will increase sharply and may boil and gush out. Be sure to cool down the engine without stopping it.	Refill the radiator with coolant by the amount that overflowed. Unclog the radiator and other components before using again. Also check the hydraulic system for oil leakage and other troubles. If oil leakage is found, immediately contact your local Kubota dealer for repairs.
11	Lock lever system error 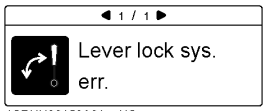 1SRUU00158A01enUS	The lock lever system is experiencing trouble.	The engine can run, but the machine fails to move.	Immediately contact your local Kubota dealer.
12	Travel 2-speed system (switching) 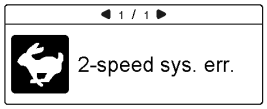 1SRUU00159A01enUS	The 2-speed switching system is experiencing trouble.	The machine still runs at low speed without switching to high speed. The machine's other functions are still operative.	Immediately contact your local Kubota dealer.
13	AI system error 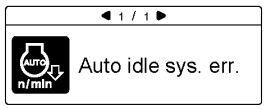 1SRUU00160A01enUS	The Auto Idle system is experiencing trouble. The accelerator fails as well.	The accelerator fails, but the machine's other functions are still operative. Move the machine to a place suitable for repairs.	Immediately contact your local Kubota dealer.
14	5 V short circuit 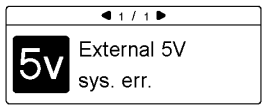 1SRUU00161A01enUS	The sensor's 5 V power supply has short circuited.	The majority of systems fail. • The engine may start and the machine may move. However, do not try any operations. Move the machine to a safe place.	Immediately contact your local Kubota dealer.
15	CAN system error 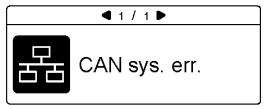 1SRUU00162A01enUS	The communication (CAN) system is experiencing trouble. Some meter readings may be erroneous or some switches may malfunction.	The engine may start and the machine may move. However do not try any operations. Must move the machine to a safe place.	Immediately contact your local Kubota dealer.
16	General switching system error 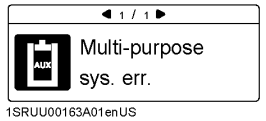 1SRUU00163A01enUS	The general switching system is experiencing trouble. This message appears only when the general switching function is preset effective.	The engine can restart and the machine can move, but the general switching system fails. When systems other than the general switching system function, the operation can be continued.	Immediately contact your local Kubota dealer.
17	AUX 1 port system error 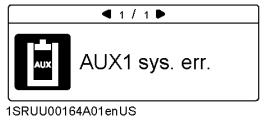 1SRUU00164A01enUS	The AUX 1 port system is experiencing trouble.	The engine can restart and the machine can move, but the AUX 1 port system fails. When systems other than the AUX 1 port system function, the operation can be continued.	Immediately contact your local Kubota dealer.

(Continued)

No.	Message	Problem or failure (details)	Machine behavior (provisional measure)	Correction
18	AUX 2/ Thumb system error 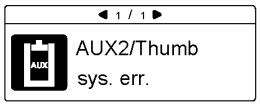 1SRUU00165A01enUS	The AUX 2 port system is experiencing trouble.	The engine can restart and the machine can move, but the AUX 2 port system fails. When systems other than the AUX 2 port system function, the operation can be continued.	Immediately contact your local Kubota dealer.
19	Periodic check (advance notice) 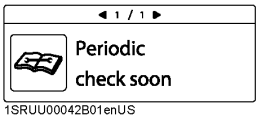 1SRUU00042B01enUS	This message appears 10 hours before the periodic check interval. The list of related components can be reviewed on the "Periodic check" screen. (See Periodic Check on page 35.)	Start the engine as usual.	Ask your local Kubota dealer for relevant part and replace the existing part with it. After replacement, turn on and off the starter switch 10 times, and this message disappears.
20	Periodic check (warning) 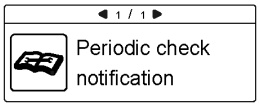 1SRUU00166A01enUS	The periodic check interval has passed. The list of related components can be reviewed on the "Periodic check" screen. (See Periodic Check on page 35.)	The engine can still start, but immediately ask your local Kubota dealer for replacement.	Ask your local Kubota dealer for relevant part and replace the existing part with it. After replacement, turn on and off the starter switch 10 times, and this message disappears.
21	Exhaust temp rise Operate carefully possible to work 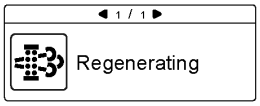 1SRUU00167A01enUS	For the process of DPF regeneration, the exhaust gas temperature rises. It is possible to work with careful operation.	–	–
22	Raise engine speed 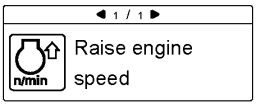 1GEMM00009A01enUS	The DPF must be regenerated.	For low engine rpm, the machine cannot start DPF regeneration.	Rev up the engine rpm and start the diesel-particulate-filter (DPF) regeneration.
23	Now HP is limited 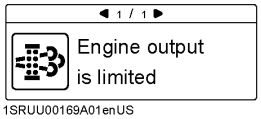 1SRUU00169A01enUS	For the process of DPF regeneration, the exhaust gas temperature rises. It is possible to work with careful operation.	To protect the DPF, engine output is limited.	–
24	Raise engine speed Now HP is limited 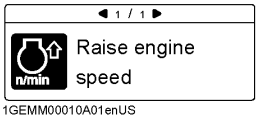 1GEMM00010A01enUS	The DPF is clogged. The DPF must be regenerated.	The diesel-particulate-filter (DPF) must be regenerated, but low engine rpm is unable to start the diesel-particulate-filter (DPF) regeneration. To protect the DPF, engine output is limited. If you leave the machine with the hydraulic locked, the engine can stop automatically.	Rev up the engine rpm and start DPF regeneration. If this message still appears, immediately contact your local Kubota dealer.

(Continued)

No.	Message	Problem or failure (details)	Machine behavior (provisional measure)	Correction
25	Regen.inhibition. Release it. 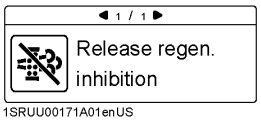 1SRUU00171A01enUS	The DPF must be regenerated.	The DPF must be regenerated, but unable to start regeneration because the inhibited switch is activated.	Move the machine to a safe place and release the inhibit switch to start DPF regeneration. If this message still appears, immediately contact your local Kubota dealer.
26	Regen. inhibition. Release it. Now HP limited 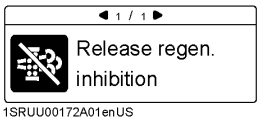 1SRUU00172A01enUS	The DPF is clogged. The DPF must be regenerated.	The DPF must be regenerated, but unable to start regeneration because the inhibited switch is activated. If you leave the machine with the hydraulic locked, the engine can stop automatically.	Move the machine to a safe place and release the inhibit switch to start DPF regeneration. If this message still appears, immediately contact your local Kubota dealer.
27	Warning-stop engine. Rev up and restart. 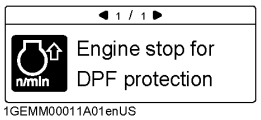 1GEMM00011A01enUS	To protect the DPF, the engine stopped automatically.	–	Turn off the starter switch and restart the engine. Move the machine to a safe place immediately and rev up the engine rpm to start the DPF regeneration.
28	The DPF is clogged up. Need repairing  1SRUU00174A01enUS	The machine can not start DPF regeneration.	DPF must be repaired.	Immediately contact your local Kubota dealer.
29	Exchange the DPF.  1SRUU00175A01enUS	The machine can not start DPF regeneration.	DPF must be replaced.	Immediately contact your local Kubota dealer.
30	Overheat advance warning Hydraulic oil temperature rising 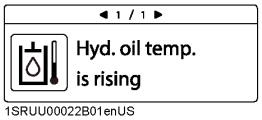 1SRUU00022B01enUS	Hydraulic oil temperature is rising somewhat higher than specified.	Operate with the load a little lessened.	–
31	Overheat advance warning Auto idling for the temperature of the hydraulic oil rising  1SRUU00023B01enUS	The engine was forced to idle because the hydraulic oil temperature had risen too high.	Leave the engine idling until the overheat advance warning disappears. Do not stop the engine because the temperature of the hydraulic oil will increase sharply. Be sure to cool down the engine without stopping it.	Unclog the oil cooler and other components before using again. Check also the hydraulic system for oil leak and other troubles. If an oil leak is found, immediately contact your local Kubota dealer for repair.

(Continued)

No.	Message	Problem or failure (details)	Machine behavior (provisional measure)	Correction
32	Warming-up 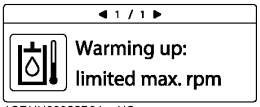 1SRUU00025B01enUS	No warm-up operation was made. The engine was revved up only to the medium rpm because the hydraulic oil temperature had dropped too low.	Warm up the engine.	–
33	Water got mixed with fuel 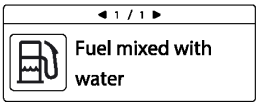 1GEMM00006B01enUS	Water is in the fuel filter and water may be in the fuel filter.	If you do not drain the fuel filter immediately after the alarm, the engine may be seriously damaged.	Immediately drain the fuel filter after stopping the engine and drain the water separator as soon as possible.
34	 1SRUU00135B01enUS	The engine cannot be started.	–	Press the engine stop button before starting engine.
35	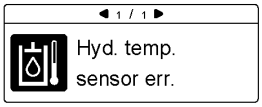 1SRUU00176A01enUS	The hydraulic oil temperature sensor system is experiencing trouble.	Meter does not show the hydraulic oil temperature, and overheating cannot be detected.	Immediately contact your local Kubota dealer.
36	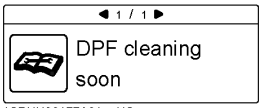 1SRUU00177A01enUS	The DPF will need cleaning soon.	Operate the machine as usual.	Contact your local Kubota dealer to have the DPF cleaned.
37	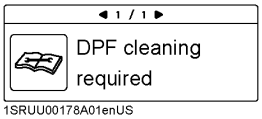 1SRUU00178A01enUS	The DPF needs cleaning.	The engine can still start, but you must immediately contact your local Kubota dealer for cleaning.	Contact your local Kubota dealer to have the DPF cleaned.
38	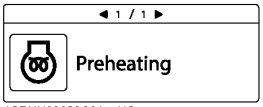 1SRUU00026C01enUS	The engine is preheating.	–	Wait until this message disappears, and then start engine.
39	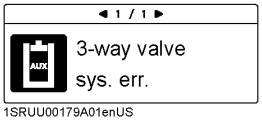 1SRUU00179A01enUS	The one-way or two-way selection valve system is experiencing trouble.	If systems other than one-way or two-way selection valve system function, work can be continued.	Immediately contact your local Kubota dealer.
40	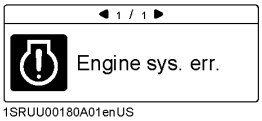 1SRUU00180A01enUS	The engine system is experiencing trouble.	–	Immediately contact your local Kubota dealer.
41	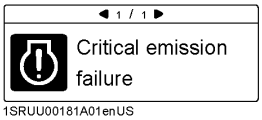 1SRUU00181A01enUS	The particulate control device (PCD) / NOx control device (NCD) is experiencing trouble.	Engine control is not working properly.	Immediately contact your local Kubota dealer for emergency repairs.

AUTOMATIC DIESEL PARTICULATE FILTER (DPF) REGENERATION

Automatic regeneration is a normal maintenance activity that a machine performs automatically.
The diesel particulate filter (DPF) serves to trap particulate matters (PM) that are contained in exhaust gases and to automatically burn (DPF-regenerate) these matters. During the regeneration, buzzer sounds and warning lamp blinks and display shows messages.
The following is an explanation and required operator action.

Warning lamp	Display	Meaning	Required operator action
Blinking (yellow)	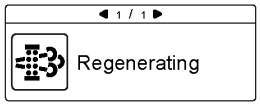 1SRUU00167A01enUS	Auto regeneration starts. Continue operating the machine.	Operate the machine until the warning lamp stops blinking. Make sure that no people, animals, plants and flammable materials are within the immediate working area.
Blinking (yellow)	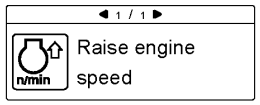 1GEMM00009A01enUS	When the message "Raise engine speed" appears on the display, raise the engine speed until the message disappears.	Increase the engine speed until the message "Raise engine speed" disappears. Auto regeneration starts. Operate the machine until the warning lamp stops blinking. Make sure that no people, animals, plants and flammable materials are within the immediate working area. (Refer to No. 22 in Navigation list of screens section.)
Blinking (yellow)	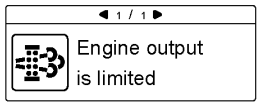 1SRUU00169A01enUS	The DPF is in the regeneration process but the engine output is limited.	Keep raising the engine speed and finish the DPF regeneration process. Make sure that no people, animals, plants and flammable materials are within the immediate working area.
Blinking (red)	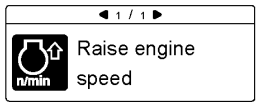 1GEMM00010A01enUS	The DPF is clogged. Start the DPF regeneration immediately. To protect the DPF, the engine output is limited. When the pilot control lock lever is pulled up, the engine will stop after 60 seconds in order to protect DPF. When the pilot control lock lever is down, the engine will not stop while the engine output is limited.	Increase the engine speed until the message "Raise engine speed" disappears. Auto regeneration starts. Make sure that no people, animals, plants and flammable materials are within the immediate working area. (Refer to No. 24 in Navigation list of screens section.)
Blinking (red)	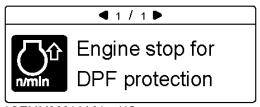 1GEMM00011A01enUS	To protect the DPF, the engine stopped automatically.	Restart the engine and raise its speed until the machine starts DPF regeneration. Unless the auto regeneration starts, contact your local Kubota dealer.
Blinking (red)	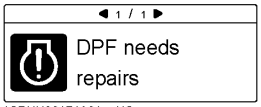 1SRUU00174A01enUS	DPF must be repaired. To protect the DPF, the engine output is limited. When the pilot control lock lever is pulled up, the engine will stop after 60 seconds in order to protect DPF. When the pilot control lock lever is down, the engine will not stop while the engine output is limited.	Immediately contact your local Kubota dealer. (Refer to No. 28 in Navigation list of screens section.)
Blinking (red)	 1SRUU00175A01enUS	Exchange the DPF. To protect the DPF, the engine output is limited.	Immediately contact your local Kubota dealer. (Refer to No. 29 in Navigation list of screens section.)

NOTE :

- **Stopping the engine or pressing the inhibit switch during the automatic regeneration cycle stops the automatic regeneration process.**
  After restarting the engine, automatic regeneration starts.

- **Regeneration time is approximately 20 to 30 minutes, and the interval is approximately 50 to 60 hours. But actual regeneration time and interval depend on usage environment like ambient temperature, exhaust temperature and engine speed.**

LOCKING AND RELEASING THE DIESEL PARTICULATE FILTER (DPF) REGENERATION

1. Press the inhibit switch (1).
   The automatic DPF regeneration is locked and the inhibit lamp on the display lights up.

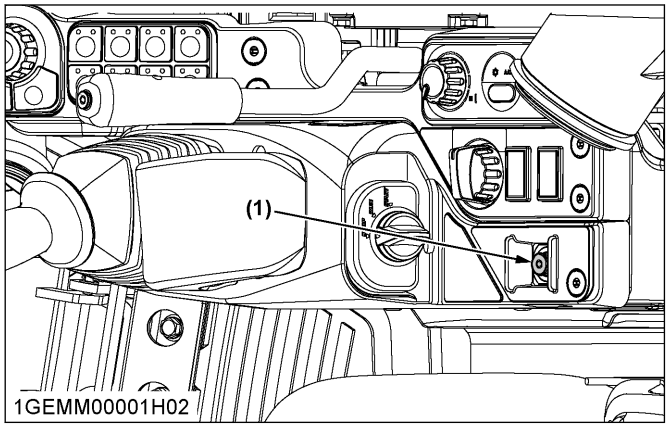

(1) Inhibit switch

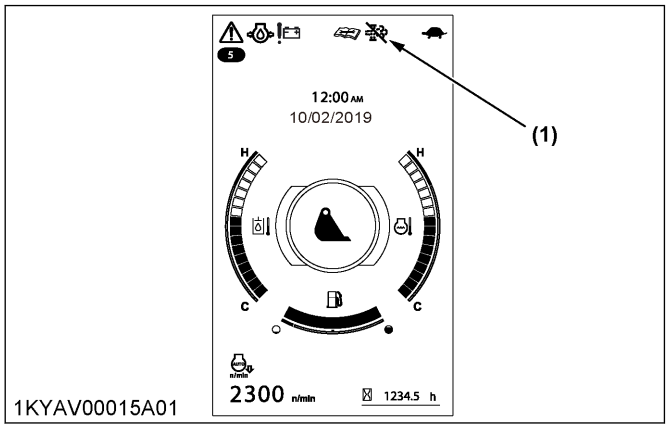

(1) Inhibit lamp

2. Take the appropriate action based on the following table.

Inhibit lamp	Warning lamp	Display	Meaning	Required operator action
Lights up (yellow)	Unlit	–	• Auto regeneration process is locked. • The state is before requirement of regeneration. • When inhibit switch turns into blinking, it requires regeneration.	• Operate the machine as usual.
Blinking (yellow)	Blinking (yellow)	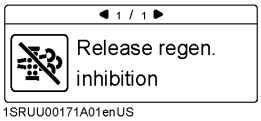 1SRUU00171A01enUS	• Auto regeneration process is locked. • Operator needs preparation of DPF regeneration.	• Move the machine to a safe place and release the inhibit switch. • Increase the engine speed until the machine starts DPF regeneration. • Make sure that no people, animals, plants and flammable materials are within the immediate working area. (Refer to No. 25 in Navigation list of screens section.)
Blinking (yellow)	Blinking (red)	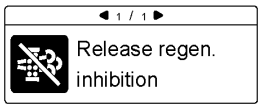 1SRUU00172A01enUS 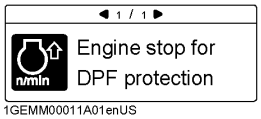 1GEMM00011A01enUS	• Auto regeneration process is locked. • Operator needs to prepare for DPF regeneration immediately. • The DPF is clogged. • To protect the DPF, engine output is limited. When the pilot control lock lever is raised up, the engine will stop after 60 seconds in order to protect DPF. • When the Pilot control lock lever is down, the engine will not stop while the engine output is limited.	• Move the machine to a safe place and release the inhibit switch. • Increase the engine speed until the machine starts DPF regeneration. • Make sure that no people, animals, plants and flammable materials are within the immediate working area. (Refer to No. 26 and 27 in Navigation list of screens section.)
Blinking (yellow)	Blinking (red)	 1SRUU00174A01enUS	• DPF must be repaired. • To protect the DPF, engine output is limited. • When the pilot control lock lever is raised up, the engine will stop after 60 seconds in order to protect DPF. • When the Pilot control lock lever is down, the engine will not stop while the engine output is limited.	• Immediately contact your local Kubota dealer. (Refer to No. 28 in Navigation list of screens section.)
Blinking (yellow)	Blinking (red)	 1SRUU00175A01enUS	• DPF must be exchanged. • To protect the DPF, engine output is limited.	• Immediately contact your local Kubota dealer. (Refer to No. 29 in Navigation list of screens section.)

SOFTWARE INFORMATION

- This product includes *“Open Source Software”* (OSS).
- You must read and accept the terms and conditions of each license (OSS license).
- This product includes OSS that is made available under the "GNU Lesser General Public License" (LGPL).
- If you have purchased this product, you may reverse engineer the OSS to the extent that such OSS licenses are applied but only when you need to do so to use this software.
- This product includes OSS that is made available under the *“GNU General Public License”* (GPL), LGPL, or the *“Mozilla Public License 2.0”* (MPL).
- If you purchase this product, you may obtain, copy, modify and distribute the applicable source code under the OSS licenses.
- The OSS license and source code is available at the following URL:
  https://www.kubota.com/products/opensource/index.html

Disclaimer

This product includes *“Open Source Software”*, which is provided *“as is”*.
Kubota and any third party that has the right to use OSS shall not be liable for any damages arising out of this software and its use or the inability to use it.

INDEX

A

after working in cold weather..... 131
air conditioner
  adjusting air flow..... 58
  cooling.....59
  defrosting..... 59
  dehumidifying-heating.....59
  demisting.....59
  heating..... 59
air conditioner condenser
  checking..... 110
air conditioner control panel.....58
air conditioner filter
  cleaning.....105
air conditioner hose
  checking..... 118
  replacing.....119
air conditioner operation.....59
air conditioner pipe
  checking..... 118
  replacing.....119
air filter element
  cleaning.....108
  inspecting.....108
  replacing.....117
air flow
  adjusting.....58
air flow sensor
  checking..... 119
air outlet (front).....58
alternator
  checking..... 118
alternator belt tension
  adjusting.....107
  checking.....107
arm
  operating.....72
auto idle (AI) control
  operating.....82
auto idle (AI) control switch
  checking.....48
automatic diesel particulate filter (DPF) regeneration.....
  148
AUX port enable switch
  checking.....48
auxiliary port
  operating.....75
  releasing pressure.....80
  selecting operation mode.....74
  setting maximum flow volume.....77
  using the one-way hold..... 77
auxiliary port operation.....74

B

basic points when lifting with cables or straps..... 87
battery
  charging..... 104
  checking condition.....103
  handling.....13
beacon light switch.....50
biodiesel fuel (BDF) B0-B5.....137
boom
  operating.....72
boom lowering valve
  operating.....81
boom swing
  operating.....74
boom swing fulcrum
  greasing..... 105
boost sensor
  checking..... 118
boost sensor pressure rubber piping
  replacing.....121
bucket
  operating.....73
bucket link pin
  greasing..... 102

C

CAB door
  closing.....55
  opening..... 55
CAB front window door
  closing.....56
  opening..... 56
CAB side window
  closing.....56
  opening..... 56
clamps
  checking.....108
clock
  reordering year/month/day.....40
  selecting 24-hour system..... 40
  selecting AM/PM system.....40
  setting.....39
coolant level
  checking.....97
coolant temperature gauge
  checking.....33
CRS diesel engine
  fuel use.....138
  maintenance.....138
cup holder..... 96

D

daily check
checking and cleaning electrical wiring....101
checking and cleaning engine....101
checking coolant level....97
checking engine oil level....98
checking fuel level....98
checking hydraulic oil level....99
checking oil cooler....100
checking radiator....100
checking washer liquid....101
daily check (warning information)....97
dealer service....25
diesel particulate filter (DPF)
checking....119
cleaning....122
handling....10
diesel particulate filter (DPF) differential pressure sensor and piping for gas leaks
checking....119
diesel particulate filter (DPF) differential pressure sensor rubber piping (front and back)
replacing....121
diesel particulate filter (DPF) exhaust gas temperature sensor
checking....119
diesel particulate filter (DPF) muffler
checking....102
diesel particulate filter (DPF) regeneration
locking....150
releasing....150
display brightness
setting....41
dozer
operating....71
DPF regeneration....64
drive lever (right, left)
operating....69

E

EGR cooler
checking....118
EGR cooler hose
replacing....121
EGR piping for gas leaks
checking....119
EGR system
checking....118
electric fuse....128
electrical equipment
checking....102
electrical outlet....51
electrical wiring
checking....101,118
cleaning....101
emergency hammer....57
engine
check points after starting the engine....63
handling....13
operating....60
starting....60
starting under cold conditions....62
starting with an auxiliary battery....63
stopping....64
engine and electrical wiring
checking....101
cleaning....101
engine auto-stop function
setting....41
engine hood
closing....95
opening....95
engine oil
changing....111
engine oil filter cartridge
replacing....112
engine oil level
checking....98
engine stop button....64
engine tachometer
checking....35
engine valve clearance
checking....117
error warning
checking....47
evacuator valve
checking....101
excavator
driving instructions....68
lifting (warning information)....87
scrapping procedure....26
storing long-term (warning information)....132
towing....85
transporting on truck....84
warranty policy....25
excavator main dimensions....139
excavator parts....28
exhaust leaks
checking....102
exhaust manifold (cracks, gas leakage, and mounting screw)
checking....118

F

fan belt tension
adjusting....107
checking....107
fire prevention....15
front attachments
greasing....110
front idler oil
changing....118

front window base
removing..... 57
fuel filter cartridge
replacing.....113
fuel gauge
checking.....32
fuel level
checking.....98
fuel level audible indication function (when refueling)
checking.....33
fuel line
checking..... 109,110
replacing.....120
fuel system
purging..... 123
fuel tank
draining water.....103
fuel tank cover
closing.....95
opening..... 95
fuse..... 126
replacing.....126
fuses
checking..... 118

G

glow indication
checking.....35
grease gun
storing..... 96

H

horn switch.....47
hour meter
checking.....35
hydraulic components
handling.....14
hydraulic hose
replacing.....121
hydraulic oil
changing.....115
hydraulic oil (hydraulic hammer operation)
checking..... 116
hydraulic oil level
checking.....99
hydraulic oil overheat warning
checking.....34
hydraulic oil temperature gauge
checking.....34
hydraulic pilot filter element
replacing.....114
hydraulic return filter cartridge
replacing.....114
hydraulic system
releasing pressure.....80
hydraulic tank selection valve
selecting circuit 81

I

inhibit diesel particulate filter (DPF) regeneration switch
..... 50
injector tip
checking..... 117
instrument panel.....29
intake air line
checking..... 110
replacing.....121
intake air line for air leaks
checking..... 118
interior lamp..... 55

K

keyless start
changing the machine password.....45
changing user passwords..... 44
deleting user passwords..... 44
registering new user passwords.....42

L

language
setting.....38
levers (control)..... 53
lifting capacity
rubber tracks..... 141
steel tracks.....141
lifting capacity (important information)..... 140
lighting for night operation.....48

M

machine
lifting procedure.....87
operating (after long-term storage)..... 133
operating (during long-term storage).....132
precautions when washing.....90
working (safety).....9
machine operation
important information..... 83
maintenance intervals..... 91
maintenance intervals (air conditioner)..... 94
maintenance work (warning information)..... 103

N

new machine
operating..... 66

O

oil cooler
checking.....100
oil separator element
replacing.....117
oil separator rubber hose
replacing.....121

one-way circuit selection valve....81
operating record
checking....38
operation
pivoting....69
spinning....70
traveling downhill....71
traveling uphill....71
operator's manual
storing....96
overheat warning
checking....34
overheating countermeasures....64

P

parking on a slope....71
parts (periodic replacement)....134
pattern selection system
changing pattern....72
pedals (control)....53
periodic check interval message
setting....35
pilot control lock lever
handling....54
starting operation....67
pilot line filter
cleaning....117
pilot valve linkage
greasing....111
plastic parts
cleaning....122
preparation before long-term storage....132
preparation for work in cold weather....131

R

radiator
checking....100
handling....13
radiator coolant
changing....119
radiator hose
replacing....119
radiator hose clamp
replacing....119
radiator hoses
checking....108
rear view camera....51
error messages during camera operation....52
recommended oils....135
refrigerant (gas)
checking....121
regular checks (warning information)....103
ROPS
checking....101
rubber track
adjusting....124

S

safety
fire prevention....15
general information....7
handling the battery....13
handling the diesel particulate filter (DPF)....10
handling the engine....13
handling the hydraulic components....14
Handling the radiator....13
loading the machine....11
OPG....8
post-operation....10
precautions when adjusting the tracks....14
precautions when performing checks or maintenance....12
precautions when using the front attachments to lift the machine....14
ROPS....8
starting to operate the machine....9
transporting the machine....11
waste material....15
working the machine....9
safety aspects when lifting with cables or straps....87
safety for children....10
safety labels
taking care of the labels....24
safety labels (danger, warning and caution)....16
screens (navigation) list....142
seat (operator's)
adjusting....66
seat belt
checking....102
service hour meter
checking....37
side cover
closing....95
opening....95
slow blow fuse
replacing....127
Software information....152
special information regarding the use rubber tracks....125
starter motor
checking....118
starter switch
checking....32
steel track
adjusting....123
suction pipe downstream the air flow sensor
replacing....121
switches....29
swivel
operating....73
swivel bearing
greasing....108
swivel bearing teeth
greasing....105

synthetic leather
cleaning....122

T

technical data....27
temperature drop indication of hydraulic oil
checking....35
the fire extinguisher
storing....97
throttle potentiometer
checking....49
tool storage box....96
track
attaching....125
changing....125
check....105
detaching....125
track roller oil
changing....118
travel alarm cancel switch....50
travel motor gear oil
changing....113
travel speed switch
checking....49
troubleshooting....129
turbo charger
checking....118
two-way circuit selection valve....81

U

USB outlet....51
user setting
checking the operating record....38
setting periodic check interval message....35
user settings....38
using the seat belt....67
utility box....97

V

V-belt
checking....101
V-belt tension
adjusting....106

W

walk-around inspection....97
warning (battery charge)....46
warning (low engine oil pressure)....46
warning (remaining fuel)....46
warning (various errors)....47
warning lamp
checking....46
warranty policy....25
washer liquid
checking....101
water separator
checking....100
cleaning water....103
draining....122
draining water....103
water separator filter element
replacing....112
wiper
operating....55
work light turn-off delay function
setting....42
working light switch
operating....47